AEROPRAKT

AIRCRAFT

AEROPRAKT-32

Pilot Operating Handbook

A32-iS-371-POH

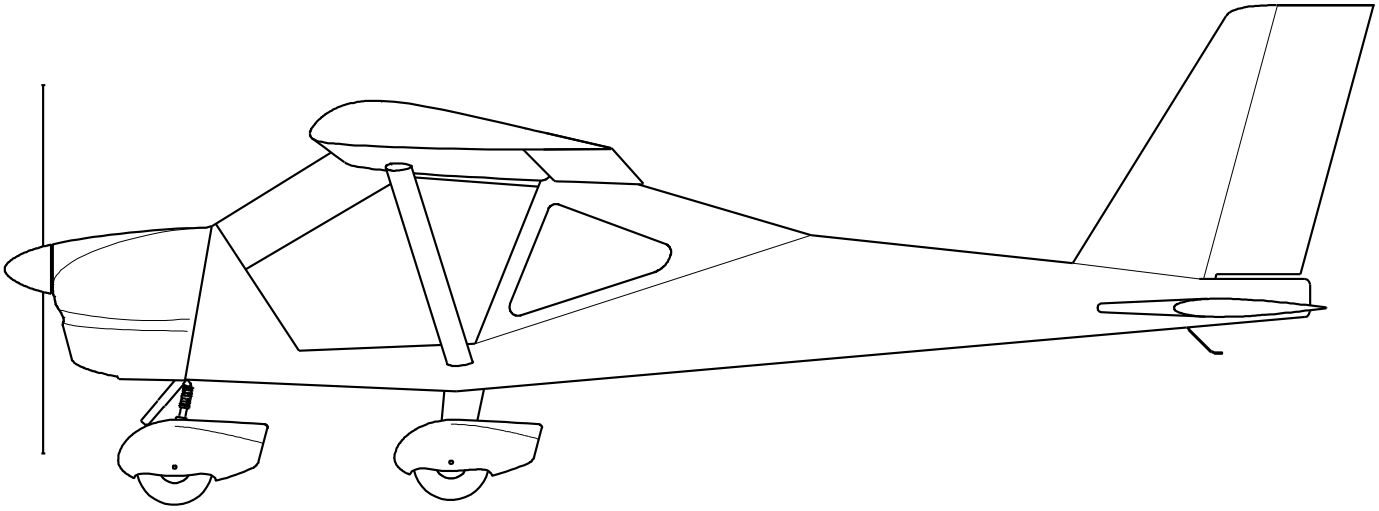

Airplane Model:	**AEROPRAKT-32 (A-32)**
Airplane Registration Number:	
Airplane Serial Number:	**371**
Date of issue:	**15.10.2025**
Approved by:	**Yuriy Yakovlyev**
Position:	**Chief designer**
Date of approval:	**15.10.2025**

This manual must be carried in the airplane at all times.

This airplane is to be operated in compliance with information and limitations contained herein.

RECORD OF MANUAL REVISIONS

No part of this manual may be reproduced or changed in any manner without a written consent of the Manufacturer.

Any revision of the present manual, except actual weighing data, must be recorded in the following table according to information from the Manufacturer.

New or amended text in the revised pages will be indicated by a black vertical line on the left hand margin, and the Revision No. and the date will be shown on the bottom left hand side of the page.

Rev. No.	Affected Section	Affected Pages	Date	Approval	Date	Date Inserted	Signature

Table of contents

Introduction **5**
1 General information **6**
1.1 General description of the airplane 6
1.2 Airplane specifications 6
2 Limitations **7**
2.1 Airspeeds and Airspeed Indicator markings 7
2.2 Service ceiling 8
2.3 Maneuvering load factors 8
2.4 Approved maneuvers 8
2.5 Fuel capacity and type 8
2.6 Engine 9
2.7 Kinds of operation limits 10
2.8 Crosswind limitation 10
3 Emergency procedures **11**
3.1 General 11
3.2 Emergency checklists 11
4 Normal Procedures **16**
4.1 General 16
4.2 Preflight check 16
4.3 Fuel levels, fuel valve settings and respective actions 18
4.4 Engine starting 19
4.5 Taxiing 20
4.6 Before takeoff 20
4.7 Normal takeoff 20
4.8 Short/soft field takeoff 20
4.9 Climb 21
4.10 Cruise 21
4.11 Approach 21
4.12 Normal landing 21
4.13 Short/soft field landing 22
4.14 Balked landing 22
5 Performance **23**
5.1 General 23
5.2 Takeoff and landing distances 23
5.3 Climb performance 23
5.4 Cruise speeds and fuel consumption at various RPM settings 23
6 Weight and Balance and Equipment List **24**
6.1 Weight and Balance Chart 24

6.2 Installed equipment list ... 25
7 Airplane and Systems Descriptions ... 27
7.1 General ... 27
7.2 Airframe ... 27
7.3 Landing gear ... 27
7.4 Engine and its controls ... 28
7.5 Propeller ... 28
7.6 Fuel system ... 28
7.7 Airplane control systems ... 30
7.8 Instrument panel ... 37
7.9 Full and static pressure system ... 39
7.10 Electrical system ... 40
7.11 Seats and harness belts ... 53
7.12 Cockpit doors ... 53
7.13 Baggage compartment ... 53
7.14 Recovery system ... 53
8 Aircraft Ground Handling and Servicing ... 55
8.1 Introduction ... 55
8.2 Towing, parking and tie-down instructions ... 55
8.3 Servicing fuel, oil and coolant ... 56
8.4 Approved fuel and oil ... 56
8.5 Cleaning and care ... 57
8.6 Disassembling and assembling the airplane ... 57
9 Supplements ... 61
9.1 General ... 61
9.2 Engine manual ... 61
9.3 Avionics and special engine instruments ... 61
9.4 Recovery system ... 61
9.5 Floats ... 61
9.6 List of installed equipment ... 62
9.7 Actual empty weight and CG position data ... 63
9.8 Airplane Flight Training Supplement ... 64
9.9 Airplane Owner Feedback to Manufacturer ... 67

Introduction

This Pilot Operating Handbook has been prepared to provide the airplane owner and operators with information required for the safe and efficient operation of this airplane.

The following ASTM standards have been and/or shall be used for the design, construction and continued airworthiness of this Aeroprakt-32 (A-32) airplane:

F2245-18 Standard Specification for Design and Performance of a Light Sport Airplane,

F2295-10 Standard Practice for Continued Operational Safety Monitoring of a Light Sport Aircraft,

F2316-12 Standard Specification for Airframe Emergency Parachutes for Light Sport Aircraft,

F2339-06 Standard Practice for Design and Manufacture of Reciprocating Spark Ignition Engines for Light Sport Aircraft,

F2506-13 Standard Specification for Design and Testing of Light Sport Aircraft Propellers,

F2745-15 Standard Specification for Required Product Information to be Provided with an Airplane,

F2746-14 Standard Specification for Pilot's Operating Handbook (POH) for Light Sport Airplane,

F2972-15 Standard Specification for Light Sport Aircraft Manufacturer's Quality Assurance System.

This A-32 airplane was manufactured by:

AEROPRAKT Manufacturing Sp. z o.o..
Address: ul. Zadziele 10.
32-406 Zakliczyn,
POLAND
Tel.: +48 602 215854
E-mail: aleksander.opoczynski@aeroprakt.pl

Should the original manufacturer of the aircraft loose its ability to support this aircraft make and model, contact:

Heavenbound Aviation
Andy Humphrey CFI, A&P, IA
8878 Harmony Church Rd.
Johnstown, OH 43031
740-644-4690
www.heavenboundaviation.com

1 General information

1.1 General description of the airplane

AEROPRAKT-32 (A-32) is a two-seat, high-wing strut braced monoplane of "classic" aerodynamic layout with closed cockpit, non-retractable landing gear with steerable nose wheel, Rotax-912-iS-Sport engine with tractor three-blade on-ground adjustable pitch propeller.

AEROPRAKT-32 is approved for flying in VFR, simple meteorological conditions.

AEROPRAKT-32 is certified in the LSA (Light Sport Airplane) category.

1.2 Airplane specifications

Specification	US units	Metric
Wing span	31 ft	9.45 m
Wing area	138 sq ft	12.83 m²
Length	20 ft 7 in	6.27 m
Height	7 ft 3 in	2.22 m
Wheel base	4 ft 2 in	1.27 m
Wheel track	5 ft 9 in	1.75 m
Gross weight (Maximum Take-Off Weight, MTOW)	1320 lb	600 kg
Top speed at sea level, ISA conditions	116 kts	215 km/h
Cruising speed (IAS) at 1000 ft, ISA conditions, engine RPM:		
3500	54 kts	100 km/h
3800	67 kts	125 km/h
4200	81 kts	150 km/h
4650	94 kts	175 km/h
5150	108 kts	200 km/h
5500	116 kts	215 km/h
Range with full tanks (30 min. reserve) at 1000 ft, still air, ISA conditions, 3700 RPM	706 nm	1307 km
Best angle of climb speed (V_X), IAS	54 kts	100 km/h
Best rate of climb speed (V_Y), IAS	65 kts	120 km/h
Stalling speed at MTOW, flaps up (V_S), IAS	32 kts	60 km/h
Stalling speed at MTOW, full flaps (V_{S0}), IAS	27 kts	50 km/h
Maximum engine power at 5800 RPM (5 minutes limit)	100 hp	73.5 kW
Total fuel capacity (standard tanks)	23.8 US gal	90 l
Usable fuel (standard tanks)	23.3 US gal	88 l
Total fuel capacity (optional tanks)	30.1 US gal	114 l
Usable fuel (optional tanks)	29.6 US gal	112 l
Approved fuel types: unleaded mogas min. RON 95 or avgas 100LL		

2 Limitations

2.1 Airspeeds and Airspeed Indicator markings

Airspeed limitations and corresponding IAS values are given in the table below.

Scheme of color markings of airspeed indicator is shown on **Fig. 1**. Its explanation is given in the table below.

Marking	IAS value or range, km/h (kts)	Airspeed (range) symbol(s) and description
White arc start	50 (27)	V_{S0} – stalling speed at maximum takeoff weight with full flaps
Green arc start	60 (32)	V_S – stalling speed at maximum takeoff weight with flaps up
White arc	50 – 147 (27 – 79)	V_{S0} to V_{FE} – flap extended speed range
Green arc	60 – 208 (32 – 112)	V_S to V_O – normal operating speed range
Green and Yellow arcs border	208 (112)	V_O – operating maneuvering speed at gross weight and minimum weight
Yellow arc	208 – 240 (112 – 130)	V_O to V_{NE} – in this range maneuvers must be conducted with caution and only in smooth air
Red line	240 (130)	V_{NE} – never-exceed speed, maximum speed for all operations

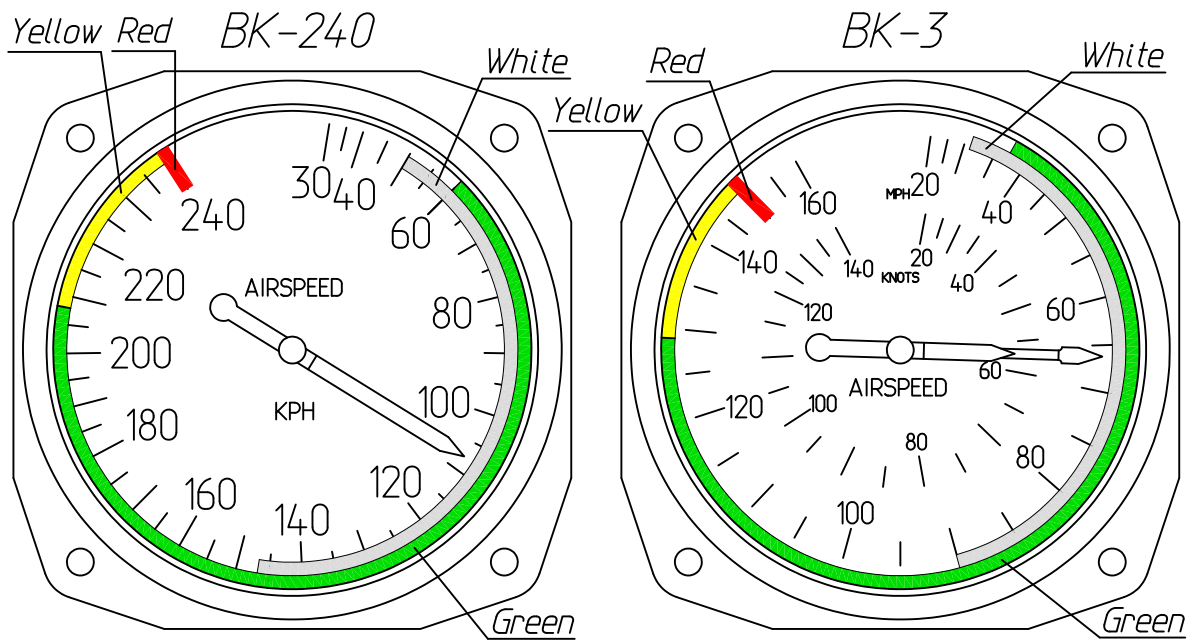

Fig. 1. Airspeed Indicator markings

2.2 Service ceiling

Service ceiling of A-32 with Rotax-912iS Sport (100 hp) engine is equal to at least 5000 m (16 000 ft).

However A-32 has neither pressurized cockpit nor oxygen equipment and therefore may not be used for high-altitude flight.

2.3 Maneuvering load factors

Limit load factors for the airplane at gross weight of 600 kg (1320 lb) are as follows:
Maximum positive limit load factor +4.0
Maximum negative limit load factor -2.0

2.4 Approved maneuvers

A-32 airplane belongs to a non-aerobatic category. All maneuvers shall be done within its airspeed and maneuvering load factor limits (G limits). Approved maneuvers include:

- turns with bank angles up to 60°,
- level and accelerated stalls without spinning,
- diving at a speed below V_{NE} of 240 km/h (130 kts) IAS.

Any aerobatics including intentional spinning is prohibited!

2.5 Fuel capacity and type

	standard		optional	
Capacity of tanks:	2×45 l	(2×11.9 US gal)	2×57 l	(2×15.05 US gal)
Total fuel capacity:	90 l	(23.8 US gal)	114 l	(30.1 US gal)
Total usable fuel:	88 l	(23.3 US gal)	112 l	(29.6 US gal)
Non-usable fuel:	2 l	(0.5 US gal)	2 l	(0.5 US gal)

Approved fuel types: see table in paragraph **2.6 Engine**.

WARNING: Using fuel grades with ethanol additive content over 5% will deteriorate the condition and shorten the service life of the composite fuel tanks.

NOTE: The readings of the fuel level indicators have to be read as follows (for both standard and optional fuel tanks):

«F» — 42 l (11.1 US gal);

«3/4» — 32 l (8.4 US gal);

«1/2» — 21 l (5.5 US gal);

«1/4» — 14 l (3.7 US gal);

«E» — 4.5 l (1.2 US gal);

«LOW FUEL» lamp is ON — less than 4.5 l (1.2 US gal).

2.6 Engine

This aircraft is equipped with a four-cylinder four-stroke Rotax-912iS Sport (100 hp) combined cooling engine produced by BRP-Powertrain GmbH&Co. KG. (Austria).

The engine is has the flat-four layout, dry sump lubrication system with a separate oil tank of 3 l (0.8 US gal) capacity, automatic valve clearance adjustment, integrated gearbox of 2.43 reduction ratio and fully redundant electronic engine management system (EMS) which includes fuel injection, ignition, etc.

All engine systems (fuel, electrical, cooling) are assembled in accordance with Rotax-912i SERIES engine operation and installation manuals.

Engine data and operational limitations are given in the table below:

Engine manufacturer	BRP-Rotax GmbH & Co KG (Austria)
Engine model	Rotax-912iS Sport
Engine type	Flat-four, four-stroke
Take-off performance	73.5 kW (100 h.p.)
Max. continuous performance	72 kW (97.9 h.p.)
Take-off speed	5800 rpm (max. 5 minutes)
Max. continuous speed	5500 rpm
Idle speed	min. 1400 rpm
Oil pressure, maximum minimum normal	7 bar (102 psi) (for a short period at cold start) 0,8 bar (12 psi) (below 3500 RPM) 2,0 to 5,0 bar (29-73 psi) (above 3500 RPM)
Oil temperature, maximum minimum normal	130 °C (266 °F) 50 °C (120 °F) 90-110 °C (190-230 °F)
Exhaust gas temperature	max. 950 °C (1742 °F)
Coolant temperature (coolant exit temperature)	max. 120 °C (248 °F)
Engine start, operating temperature	max. 50 °C (120 °F) (ambient temperature) min. -25 °C (-13 °F) (oil temperature)
Fuel pressure, minimum maximum	2.8 bar (41 psi) 3.2 bar (46 psi)
Acceptable fuel pressure exceedance (max. 3 sec.)[1]	2.5 bar (36 psi) 3.5 bar (51 psi)
Fuel antiknock properties	min. RON 95 (min. AKI 91[2])
European standard of fuel	EN 228 super, EN 228 super plus
Aviation Standard of fuel	AVGAS 100 LL (ASTM D910)
Oil specification	Use only oil with Rotax norm RON 424 classification

NOTE: On all issues of engine operation see Rotax engine Operator's Manual. Follow its instructions to ensure safe and efficient operation of the engine.

[1] Fuel pressure exceedance only allowed after power setting change

[2] Anti-Knock Index (RON+MON)/2

2.7 Kinds of operation limits

This aircraft is approved for flying day and night, VFR, simple meteorological conditions. Flight into icing conditions is prohibited.

2.8 Crosswind limitation

Maximum crosswind component for A-32 airplane is 7 m/s (14 kts).

It is highly recommended to choose upwind direction for takeoff and landing with the least crosswind. It will significantly shorten takeoff and landing distances and increase degree of safety.

3 Emergency procedures

3.1 General

This section contains recommendations to the pilots in case of emergency in flight. However such situations, caused by airframe or engine malfunction are extremely rare provided that pre-flight inspections and checks are performed regularly.

3.2 Emergency checklists

3.2.1 Engine fire during start

1. Throttle – IDLE.
2. Lane A and B – OFF.
3. Fuel pumps 1 and 2 – OFF.
4. Unfasten seat belts, abandon cockpit.
5. Take measures to extinguish the fire.

3.2.2 Engine failure during takeoff

3.2.2.1 during takeoff roll

1. Throttle – IDLE.
2. Lane A and B – OFF.
3. Fuel pumps 1 and 2 – OFF.
4. Brakes – APPLY as necessary.

3.2.2.2 immediately after takeoff

1. Direction – NO TURN BACK.
2. Airspeed – 110 km/h (68 mph, 59 kts) - best glide.
3. Throttle – IDLE.
4. Lane A and B – OFF.
5. Fuel pumps 1 and 2 – OFF.
6. Battery switch – OFF.
7. Fuel valves – CLOSE.
8. Landing – STRAIGHT AHEAD, avoid colliding with obstacles.

3.2.3 Loss of engine power in flight

3.2.3.1 during climb

1. Fuel valves – BOTH OPEN.
2. Fuel pump 1 – ON and Fuel pump 2 – OFF.
3. ECU Voltage – CHECK.
4. EMERGEN POWER switch – ON if ECU Voltage 9 V or less.
5. Airspeed – 110 km/h (68 mph, 59 kts) - best glide.
6. Landing area – SELECT (consider altitude and wind).

3.2.3.2 in level flight

1. Airspeed – 110 km/h (68 mph, 59 kts) – best glide.
2. Landing area – SELECT (consider altitude and wind).
3. Engine – RESTART (if time and altitude permit), see section **3.2.4.**
4. Unable to restart – follow emergency landing procedure, see section **3.2.5**.

3.2.4 Restarting engine in flight

1. Throttle – IDLE.
2. Fuel level – CHECK.
3. Fuel valves – BOTH OPEN.
4. Fuel pump 1 – ON and 2 – OFF.
5. Lane A and B – CHECK ON.
6. EMERGEN POWER switch – ON.
7. START button – PRESS until engine start (maximum 10 seconds).
8. Fuel pump 2 – ON.
9. Throttle – AS REQUIRED.
10. EMERGEN POWER switch – OFF (if engine runs smoothly and at least one of the Lane A or Lane B warning lights is not permanently ON).
11. EMS lamps A and B ON – perform PRECAUTIONARY LANDING see section **3.2.6**

3.2.5 Emergency landing without engine power

1. Airspeed – 110 km/h (68 mph, 59 kts) – best glide.
2. Flaps – position 1.
3. Fuel pumps 1 and 2 – OFF.
4. Fuel valves – CLOSE.
5. Landing area – SELECT, consider altitude and wind. (No place suitable for landing – use recovery system.)
6. Emergency call – TRANSMIT (121.5 MHz or nearest airfield frequency).
7. Flaps – EXTEND FULLY on final.
8. Landing – in the SELECTED place, avoid colliding with obstacles.
9. Touchdown – at minimum speed.

3.2.6 Precautionary landing with engine power

(In case of decision to discontinue the flight with engine running)

1. Airspeed – SELECT SAFE for the particular situation.
2. Throttle – SET to maintain selected airspeed.
3. Fuel – CHECK level and valves.
4. Map – CHECK for nearest airfields/area suitable for landing.
5. Landing area – SELECT.

6. Radio – REPORT decision to land on the selected place if necessary.
7. Landing – follow NORMAL or SHORT-FIELD landing procedure as appropriate.

3.2.7 Fire in flight

1. Lane A and B – OFF.
2. Fuel pumps 1 and 2 – OFF.
3. Fuel valves – CLOSE.
4. Yoke/Stick – PUSH to descend.
5. Airspeed – BELOW 240 km/h (130 kts).
6. Landing area – SELECT (consider altitude and wind).
7. Landing – in the SELECTED place, avoid colliding with obstacles.
8. Unfasten seat belts, abandon cockpit.
9. Take measures to extinguish the fire.

3.2.8 Failures of the engine management system (EMS warning lights)

Lane A	Lane B	Action
OFF	Flashing	Land at the nearest airfield, see section **4.12**
Flashing	OFF	
OFF	ON	
Flashing	Flashing	
Flashing	ON	
ON	OFF	
ON	Flashing	
ON	ON	Perform precautionary landing, see section **3.2.6**

3.2.9 Loss of oil pressure

1. Follow PRECAUTIONARY LANDING procedure, see section **3.2.6**.
2. Engine overheating or stopped – follow EMERGENCY LANDING procedure, see section **3.2.5**.

3.2.10 High oil pressure

1. Throttle – REDUCE rpm, IDLE if necessary.
2. Airspeed – 110 km/h (68 mph, 59 kts) – best glide.
3. Oil pressure – CONTROL.
4. Oil pressure normal – follow PRECAUTIONARY LANDING procedure, see section **3.2.6**.
5. Oil pressure high – follow EMERGENCY LANDING procedure, see section **3.2.5**.

3.2.11 Emergency descent

1. Yoke/Stick – PUSH to descend.
2. Throttle – IDLE.
3. Airspeed – BELOW 240 km/h (130 kts).
4. Engine speed – BELOW 5800 rpm.
5. Air traffic – CONTROL to avoid collisions.
6. Altitude – CONTROL.

7. Terrain – CONTROL.
8. At safe altitude – PULL YOKE GENTLY to level off.
9. G loads – DO NOT EXCEED +4g.

3.2.12 Alternator failure

Follow PRECAUTIONARY LANDING procedure, see section **3.2.6**.

3.2.13 Inadvertent spin

1. Rudder pedals – FULLY AGAINST ROTATION.
2. Yoke/Stick – PUSH slightly forward of neutral.
3. Rotation stopped – rudder pedals NEUTRAL.
4. Speed reached 110 km/h (59 kts) – PULL YOKE GENTLY to recover from diving.
   Do not exceed +4g and 240 km/h (130 kts)!

WARNING: Intentional spinning in A-32 is prohibited!

NOTE: In level flight and during turn stall warning is assured by the aerodynamic characteristics of A-32 – gentle shaking of the airplane and yoke/stick due to the starting airflow separation.

3.2.14 Inadvertent icing encounter

1. Abandon icing build-up area.
2. Icing build-up not stopped – FOLLOW PRECAUTIONARY LANDING procedure, see section **3.2.6**.

3.2.15 Loss of primary instruments

3.2.15.1 ASI failure due to full pressure line blockage

Signs of the blockage – airspeed indicator reading either:
- does not change with changing airspeed in level flight or,
- reduces during a steady descent or,
- increases during a steady climb.

1. Airspeed indicator readings – IGNORE.
2. In level flight – SET THROTTLE to 4000-4500 rpm.
3. Altitude – MAINTAIN.
4. In descent – SET THROTTLE to IDLE.
5. Sink rate – SET to 3 m/s (600 ft/min).
6. Follow PRECAUTIONARY LANDING procedure, see section **3.2.6**.

3.2.15.2 Altimeter, VSI and ASI failure due to static pressure line blockage

Signs of the blockage:
- altimeter and vertical speed indicator readings do not change with changing altitude or,
- airspeed indicator reading increases during a steady descent or,
- airspeed indicator reading reduces during a steady climb.

1. IGNORE altimeter, VSI and ASI readings.
2. Airplane attitude – CONTROL by the position of the horizon line with relation to the wings and engine cowling.

3. Airspeed and vertical speed – CONTROL using throttle.
4. Follow PRECAUTIONARY LANDING procedure, see section **3.2.6**.

3.2.15.3 Powerplant instruments failure

(Tachometer, oil, water and exhaust temperature indicators, fuel quantity indicator)

1. IGNORE powerplant instruments readings.
2. Engine rpm – CONTROL by engine noise.
3. Follow PRECAUTIONARY LANDING procedure, see section **3.2.6**.

3.2.16 Loss of flight controls

1. Elevator control fails – use elevator TRIM TAB control.
2. Rudder control fails – use AILERONS to control direction.
3. Aileron control fails – use RUDDER to control bank.

4 Normal Procedures

4.1 General

This section describes normal procedures recommended for safe operation of the A-32.

4.2 Preflight check

Pilots must inspect the general condition of the airplane during its preflight check. The airplane must have no damage or maladjustments that may be critical for the flight safety. The cockpit glass, propeller, wing and empennage must be clean of rainwater, snow, frost, ice, and dirt as they impair visibility and aerodynamics and increase weight.

Preflight check must be performed according to the following order and requirements:

4.2.1 Entire airplane

1. Covers and clamps – REMOVED.
2. Airplane – CLEAN of rainwater, snow, frost, ice and dirt.
3. Rigging – CHECK visually.
4. External damage – NONE.

4.2.2 Power plant

1. Propeller and spinner – CLEAN, INTACT and SECURE.
2. Top cowling – REMOVE for engine inspection.
3. Oil, coolant and braking fluid – CHECK level.
4. Engine mount and vibration dampers – NO CRACKS and INTACT.
5. Cables and hoses – INTACT and SECURE.
6. Fuel, oil, coolant leaks – NONE.
7. Exhaust system, its attachments, joints and springs – NO CRACKS and INTACT.
8. Top cowling – INSTALL back.
9. Cowling and its locks – INTACT and LOCKED.

4.2.3 Landing gear

1. Wheel fairings – CLEAN, INTACT and SECURE.
2. Wheel pressure – OK.
3. Tires – NO CRACKS, WEAR OK.
4. Main wheel brakes – CLEAN, INTACT and SECURE.
5. Braking fluid – NO LEAKS.
6. Nose and main legs – NO CRACK and INTACT.
7. Nose leg shock absorber – INTACT.

4.2.4 Right wing

1. Wing and strut surface – CLEAN and INTACT.
2. Wing and strut attachment fittings and bolts – IN PLACE, INTACT and SECURE.

3. Wing fuel tank cap – IN PLACE and SECURE.
4. Fuel leaks – NONE.
5. Fuel tank vent outlet – CLEAN and INTACT.
6. Wing tip and navigation/strobe light – INTACT.
7. Flaperon clamp – REMOVED.
8. Tie-down ring – REMOVED.
9. Flaperon – CLEAN and INTACT.
10. Flaperon hinge brackets – INTACT, BOLTS SECURE, HINGES GREASED.
11. Flaperon control linkage attachment – INTACT and SECURE.

4.2.5 Right side of fuselage

1. Fuselage surface – CLEAN and INTACT.
2. Cockpit glass – CLEAN, INTACT and NO CRACKS.
3. Door hinges and lock – INTACT.
4. Recovery system condition – CHECK visually.
5. Drain valve – CLOSED, NO FUEL LEAKS.
6. Fuel residue – DRAIN and CHECK.

4.2.6 Empennage

1. Empennage surface – CLEAN and INTACT.
2. Clamps/stops – REMOVED.
3. Horizontal stabilizer attachment fittings and bolts – INTACT and SECURE.
4. Rudder, elevator and trim tab – CLEAN and INTACT.
5. Rudder, elevator and trim tab hinge brackets – INTACT, SECURE and GREASED.
6. Rudder, elevator and trim tab control linkage attachment – INTACT and SECURE.

4.2.7 Left side of fuselage

1. Fuselage surface – CLEAN and INTACT.
2. Cockpit glass – CLEAN, INTACT and NO CRACKS.
3. Door hinges and lock – INTACT.
4. Battery and power cables' attachment – SECURE, CONDITION OK.
5. Control system linkages inside the rear fuselage – CHECK visually.
6. Baggage container condition – CHECK visually.

4.2.8 Left wing

1. Flaperon control linkage attachment – INTACT and SECURE.
2. Flaperon hinge brackets – INTACT, BOLTS SECURE, HINGES GREASED.
3. Flaperon – CLEAN and INTACT.
4. Tie-down ring – REMOVED.

5. Flaperon clamp – REMOVED.
6. Fuel tank vent outlet – CLEAN and INTACT.
7. Fuel leaks – NONE.
8. Wing fuel tank cap – IN PLACE and SECURE.
9. Wing tip and navigation/strobe light – INTACT.
10. Wing and strut attachment fittings and bolts – IN PLACE, INTACT and SECURE.
11. Wing and strut surface – CLEAN and INTACT.
12. Pitot/static pressure probe – COVER REMOVED, CLEAN and INTACT.

4.2.9 Cockpit

1. Windscreen glass – CLEAN, INTACT and NO CRACKS.
2. Cockpit interior – CLEAN, INTACT, NO FOREIGN OBJECTS.
3. Seats – INTACT, ADJUSTED and SECURE.
4. Harness belts – INTACT, ADJUSTED and LOCKED (with pilots in the seats).
5. Doors – CLOSED and LOCKED.
6. Flight planning including weight and CG check – PERFORMED.
7. Onboard documentation/maps required for the flight – AVAILABLE.
8. Baggage container – BAGGAGE SECURED, CONTAINER CLOSED.
9. Starter key – REMOVED
10. All electrical switches – OFF.
11. Flight instruments – INTACT, CHECK READINGS.
12. Movements of controls – check FREE and FULL.
13. Yokes/Stick, rudder pedals, elevator trim tab lever – NEUTRAL.
14. Flaps – RETRACTED.
15. Parking brake – ON.

4.3 Fuel levels, fuel valve settings and respective actions

1. BOTH TANKS ARE FULL – CLOSE ONE OF THE FUEL VALVES (to prevent fuel escaping from the tanks through the air vent).
2. FUEL LEVEL IS BETWEEN 3/4 AND 1/4 IN ONE OF THE TANKS – OPEN BOTH FUEL VALVES. It is recommended to keep the fuel level equal in both tanks by using the fuel valves.

WARNING: Before closing one of the fuel valves in flight make sure that the other valve is open!

3. FUEL LEVEL IS BELOW 1/4 IN ONE OF THE TANKS – BOTH FUEL VALVES MUST BE ALWAYS OPEN.

4.4 Engine starting

1. Doors – check CLOSED.
2. Battery switch (under left seat) – ON.
3. Master switch – ON.
4. Fuel level – CHECK (see **4.3**).
5. Fuel valves – CHECK (see **4.3**).
6. Throttle – APPROX. 50% OF THROTTLE VALVE OPENING AT THE NORMAL AMBIENT TEMPERATURE. 55% at cold weather condition and 45% at hot weather condition. For more information see Operators Manual of Rotax 912iS engine.
7. Strobes – ON.
8. Fuel pump 1 – ON.
9. Fuel pump 2 – OFF
10. Lane A – ON.
11. Lane B – ON.
12. Start POWER switch – UP (ON) and HOLD.
13. Fuel pressure – min. 3.0 bar.
14. Warning lights A and B – wait till OFF.
15. START button – PRESS to start engine (10 seconds only without interruption, followed by a cooling period of 2 minutes).
16. START button, Start POWER switch – RELEASE.
17.

Cold engine	Warm engine
a) Throttle – AS REQUIRED b) CHECK Oil pressure above 3 bar. c) Throttle – 2500 RPM for 5 seconds. d) Battery charge – check ON. e) Throttle – 2000 RPM for 2 minutes. f) Throttle – 2500 RPM. g) CHECK oil temp. 50°C. h) CHECK coolant temperature: MIN 60°C; i) CHECK fuel pressure – 2.8…3.2 bar. j) Throttle – IDLE MIN 1400.	a) Throttle – AS REQUIRED b) CHECK Oil pressure above 3 bar. c) Throttle – 2500…2600 RPM. d) Battery charge – check ON. e) CHECK oil temp. 50°C. f) CHECK coolant temperature: MIN 60°C; g) CHECK fuel pressure – 2.8…3.2 bar. h) Throttle – IDLE MIN 1400.

18. Fuel pump 2 – ON.
19. Throttle – 4000 RPM.
20. Lane A and B – CHECK MAX 250 RPM DROP/INCREASE.
21. Throttle – 2000 RPM.
22. Fuel pump 2 – OFF for 5 seconds.
23. Fuel pressure – 2.8…3.2 bar.
24. Fuel pump 2 – ON.
25. Fuel pump 1 – OFF for 5 seconds.

26. Fuel pressure – 2.8…3.2 bar.
27. Fuel pump 1 – ON.
28. Throttle – IDLE.

4.5 Taxiing

1. Throttle – IDLE.
2. Taxiway – CHECK CLEAR.
3. Coolant and oil temperature – CHECK.
4. Parking brake – OFF.
5. Throttle – SET REQUIRED TAXI SPEED.
6. Yoke/Stick – elevator NEUTRAL, ailerons AGAINST crosswind.
7. Brakes – use as required, set throttle to IDLE when stopping.
8. To stop immediately – IGNITION OFF and ENGAGE BRAKES.

4.6 Before takeoff

1. Hold position – LINE UP AND WAIT.
2. Brakes – ENGAGE.
3. Coolant temperature – CHECK minimum 140°F (60°C).
4. Oil temperature – CHECK minimum 120°F (50°C).
5. Fuel level – CHECK (see **4.3**).
6. Fuel valves – CHECK (see **4.3**).
7. Flaps – EXTEND position 1.

4.7 Normal takeoff

1. Rudder pedals – NEUTRAL.
2. Brakes – RELEASE.
3. Throttle – gradually FULL POWER.
4. Yoke/Stick – elevator NEUTRAL, ailerons AGAINST CROSSWIND.
5. Rudder pedals – maintain takeoff direction.
6. Yoke/Stick – PULL gently to lift the nose wheel at 40 km/h.
7. After take-off accelerate to at least 80 km/h (50 mph, 43 kts) and start to climb.

4.8 Short/soft field takeoff

1. Flaps – EXTEND FULLY.
2. Hold position – OCCUPY.
3. Takeoff distance – CHECK if sufficient.
4. Rudder pedals – NEUTRAL.
5. Throttle – gradually FULL POWER.
6. Brakes – RELEASE.

7. Yoke/Stick – elevator NEUTRAL, ailerons AGAINST CROSSWIND.
8. Rudder pedals – maintain takeoff direction.
9. Liftoff – at 65 km/h (35 kts).
10. Accelerate to at least 90 km/h (49 kts) at 1-2 m (3-7 ft) and start to climb.
11. Speed – SET best angle of climb speed V_X = 100 km/h (54 kts).

4.9 Climb

1. Speed – SET: best angle of climb speed V_X = 100 km/h (54 kts) or
   best rate of climb speed V_Y = 120 km/h (65 kts)
   in strong turbulence +10 km/h (5 kts).
2. Flaps – RETRACT SLOWLY at safe altitude.
3. Engine parameters - OK.

4.10 Cruise

1. Flight altitude – OCCUPY and monitor. Keep safe altitude over obstacles.
2. Cruise speed – SET, in strong turbulence – min. 100 km/h (54 kts), max.151 km/h (81 kts).
3. Elevator trim tab – ADJUST as required.
4. Fuel level – CHECK (see **4.3**).
5. Fuel valves – CHECK (see **4.3**).
6. Turns – perform with caution in strong turbulence and at low altitudes.

4.11 Approach

1. Speed – REDUCE below 147 km/h (79 kts), minimum 100 km/h (54 kts).
2. Flaps – EXTEND position 1. Wind stronger 8 m/s (16 kts) – FLAPS UP.
3. Elevator trim tab – ADJUST as required.
4. Approach speed on final – 100 km/h (54 kts), +10 km/h (5 kts) in rain or strong turbulence.
5. Too high on final – REDUCE RPM, at idle – SLIP.
6. Too low on final – INCREASE RPM. **DO NOT RETRACT FLAPS when flying low over high obstacles or close to the ground!**

4.12 Normal landing

1. Direction – ALIGN the airplane WITH THE RUNWAY using rudder pedals.
2. Side drift – ELIMINATE by banking against the drift (crosswind, if any).
3. Flare – start at 5 m (15 ft), level off at approximately 0.3 m (1 ft).
   Gradually reduce bank and side drift while flaring and leveling off.
4. Throttle – IDLE.
5. Touchdown – at minimum speed. **Avoid touching ground with the tail.**
6. Yoke/Stick – HOLD to reduce the speed and PUSH gently to lower the nose wheel slowly. Pedals – set NEUTRAL before touching ground with the nose wheel (in cross-wind conditions).

7. Flaps – RETRACT.
8. Brakes – ENGAGE as required. **Avoid resonant vibrations of the main landing gear legs while braking!**

4.13 Short/soft field landing

1. Flaps – EXTEND FULLY.
2. Approach distance – REDUCE by side slipping when clear of obstacles.
3. Approach speed on final – 90 km/h (49 kts), +10 km/h (5 kts) in rain or strong turbulence.
4. Direction – ALIGN the airplane WITH THE RUNWAY using rudder pedals.
5. Side drift – ELIMINATE by banking against the drift (crosswind, if any).
6. Flare – start at 5 m (15 ft), level off at approximately 0.3 m (1 ft).
   Gradually reduce bank and side drift while flaring and leveling off.
7. Throttle – IDLE.
8. Touchdown – at minimum speed at the beginning of the runway. **Avoid touching ground with the tail.**
9. Flaps – RETRACT.
10. Yoke/Stick – HOLD to reduce the speed and PUSH gently to lower the nose wheel slowly.
11. Brakes – soft field: DO NOT USE;
    short field – ENGAGE as required. **Avoid resonant vibrations of the main landing gear legs while braking!**

4.14 Balked landing

1. Throttle – gradually FULL POWER.
2. Descent – DISCONTINUE.
3. Speed – accelerate to at least 100 km/h (54 kts) flying level.
4. Climb – at 100 km/h (54 kts).
5. Flaps – RETRACT SLOWLY at safe altitude.

5 Performance

5.1 General

This section contains performance data of A-32 airplane of standard (basic) configuration at maximum takeoff weight in the following environmental conditions: ICAO standard atmosphere (ISA), mean sea level (MSL), no wind, hard and even runway. Those data may vary depending upon the configuration and technical condition of a particular aircraft and actual environmental conditions of its operation.

5.2 Takeoff and landing distances

The minimum takeoff and landing distances of A-32 for the above conditions are specified below. However pilots should always keep in mind that actual takeoff and landing distances depend on condition of the aircraft, environment and pilot skill.

Takeoff/Landing run ..... 120/158 m (394/518 ft)

Takeoff distance to 15 m (50 ft) ..... 319 m (1047 ft)

Landing distance from 15 m (50 ft) ..... 404 m (1325 ft)

5.3 Climb performance

The rate of climb depends on atmospheric conditions, airplane takeoff weight and flap setting. The climb performance data of A-32 in ISA conditions at MSL, maximum takeoff weight are specified below:

Best angle of climb speed V_X ..... 100 km/h (54 kts)

Best rate of climb speed V_Y ..... 120 km/h (65 kts)

Maximum rate of climb at V_X ..... 2.8 m/s (551 fpm)

Maximum rate of climb at V_Y ..... 4.2 m/s (827 fpm)

5.4 Cruise speeds and fuel consumption at various RPM settings

The cruise speeds and fuel consumption depend upon a multitude of factors: propeller pitch and engine adjustments, fuel quality, atmospheric conditions, flight altitude, aircraft loading and condition of its outer surface, etc.

With the KievProp three-blade propeller adjusted to take-off RPM of 5100 per minute and standard condition of atmosphere and aircraft the following cruise speeds and fuel consumption values may be used for flight planning:

Engine RPM	Cruise speed (IAS)		Fuel consumption	
3400	80 km/h	43 kts	6.9 l/h	1.83 US gal/h
3500	100 km/h	54 kts	7.2 l/h	1.90 US gal/h
3800	125 km/h	67 kts	8.5 l/h	2.24 US gal/h
4200	150 km/h	81 kts	10.5 l/h	2.78 US gal/h
4650	175 km/h	94 kts	13.0 l/h	3.43 US gal/h
5150	200 km/h	108 kts	16.9 l/h	4.47 US gal/h
5500	215 km/h	116 kts	21.5 l/h	5.69 US gal/h

However these values should be considered as approximate as they may vary due to effect of the above mentioned factors. It is recommended to verify those values for the particular conditions in which the exact values are required.

6 Weight and Balance and Equipment List

This section contains information about weight and balance requirements for the safe operation of the airplane. It is responsibility of the pilot in command to ensure before every flight that weight and balance of the airplane remains within the specified limits. Failure to do so may cause deterioration in airplane's flight performance and stability characteristics and, as consequence, lead to unsafe operation.

6.1 Weight and Balance Chart

This subsection contains weighing and CG location data of the aircraft in configuration “as built”. Any permanent modification of the aircraft configuration (such as replacement, removal/installation of any parts or/and equipment) essentially affecting those data shall be accounted for in this weight and balance chart by appropriate revisions of this subsection data.

Weight readings at: front wheel ..... 151 lbs.

left wheel..... 322 lbs.

right wheel..... 323 lbs.

Total empty weight:..... 796 lbs.

Total maximum take-off weight….1320 lbs.

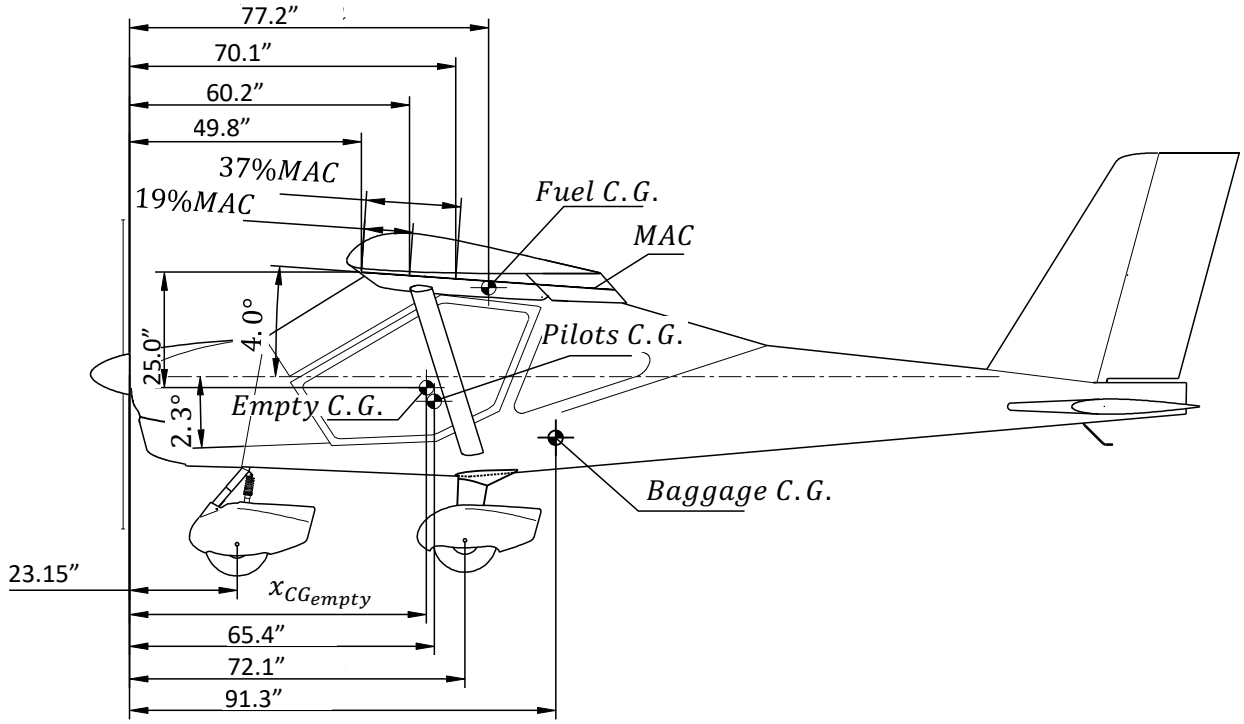

Fig. 2

Empty C.G. position from the datum (engine flange):

C.G. position for the maximum take-off weight:

Item	Weight, lbs	×	CG arm, inch	=	Moment, inch/lbs
Empty airplane	796	×	62.8	=	49,986
Crew (171x2)	342	×	65.5	=	22,401
Baggage	0	×	91.3	=	0
Fuel (2×57 l)	181	×	77.2	=	13,973
Total:	**1319**				**86,360**
X_{CG} = Total moment / Total weight		=	**65.5**		

Note: X_{CG} must be between 60.2 and 70.1 (19% and 37% MAC) as shown in **Fig. 2.**

6.2 Installed equipment list

This subsection contains a table with the list of the installed optional equipment affecting weight and balance of the aircraft. It is responsibility of the aircraft owner/operator that any such equipment installed in the aircraft after the date of its manufacture is listed in the table below.

No.	Equipment description and Part No.	Weight, kg	CG arm, m

No.	Equipment description and Part No.	Weight, kg	CG arm, m

7 Airplane and Systems Descriptions

7.1 General

This section provides description and operation of the airplane and its systems. Some equipment described herein is optional and may not be installed in the airplane. Refer to Section 9, Supplements, for details of other optional systems and equipment.

7.2 Airframe

Wing: high placed, strut braced, constant chord. Wing section is P-IIIa-15%. Wing primary structure consists of a single spar, ribs and aft web. Forward of the spar the wing has 2024T3 aluminum alloy skin of 0.020"-0.032" sheet, which together with the spar web forms the wing torsion box. Aft of the spar the wing is covered with the metal skin on top and thermoshrinkable fabric on the bottom side. Wing ribs are made of 6061T6 sheet of 0.020"-0.032" thickness. The spar is a riveted structure consisting of a web, made of 0.032" 6061T6 sheet, and caps, made of an extruded section (D16chT alloy angle). The wing strut attachment bracket and front attachment bracket of the wing are fixed to the spar. The rear attachment bracket of the wing is fixed to the aft web. The flaperon (drooping aileron) hinge brackets are fixed to ribs No. 1, 5, 9 and 13. All brackets are made of 5 mm 2024T3 sheet.

The primary structure of the flaperon consists of the leading edge skin, spar, trailing edge section and ribs. The LE skin and spar comprise the torsion box. Flaperon covering is made of synthetic thermoshrinkable fabric.

The fuselage is an all-metal semimonocoque structure. The frames are made of 6061T6 aluminum alloy sheets of 0.063" to 0.080" thickness. The fuselage skin is made of 2024T3 aluminum alloy sheets of 0.02" to 0.04" thickness.

Engine cowling is made of composites.

The doors, cockpit and part of the fuselage have windows of organic glass.

The primary structure of the all-flying horizontal tail (AFHT) of ribs and a spar. The leading edge skin is made of a 2024T3 aluminum alloy sheets of 0.020" thickness. Aft of the spar AFHT is covered with fabric. The AFHT has 2 hinge brackets of its attachment to fuselage.

The fin is made as integral part of the fuselage. It consists of a spar, ribs and 2024T3 aluminum alloy skin of 0.020" thickness.

7.3 Landing gear

Airplane landing gear is of tricycle type with steerable nose wheel. The main LG is of the cantilever spring type. The main LG leg is made of aluminum alloy. It is attached to the lower boom of the frame No. 3 at two points: upper and lower supports. The support brackets are machined of aluminum alloy. The main LG wheels are fitted with hydraulic disk brakes.

The nose LG leg is steerable, of trailing link type. The steering is ensured using the rudder pedals via pushrods, connecting the left and right side pedals with bellcrank on the strut. The leg consists of a strut and a trailing link in form of nose wheel fork. The trailing link is connected to the strut with a shock absorber/damper.

The nose leg is attached to the frame No. 1 at two points – at upper and lower supports. The upper support is made of 5 mm 2024T3 aluminum alloy sheet and the lower one is build-up. The supports are fitted with bronze bushings.

Each wheel is fitted with a wheel spat (fairing) or mud screens (in case of the low-profile tires and 6.00×6 wheels).

Landing gear data: wheel base – 1.243 m (4 ft 1 in),
wheel track – 1.729 m (5 ft 8 in),
min. turn radius ~ 2 m (7 ft).

Main wheels: size – 6.00×6
pressure – 1.6 bar (22.7 psi)

Nose wheel: size – 6.00×6 brakeless wheel
steering angle ±30 degrees
pressure – 1 bar (14.5 psi)

7.4 Engine and its controls

This aircraft is equipped with a four-cylinder four-stroke Rotax-912iS Sport (100 hp) combined cooling engine produced by BRP-Rotax GmbH&Co KG, Austria.

The engine is has the flat-four layout, dry sump lubrication system with a separate oil tank of 3 l (0.8 US gal) capacity, automatic valve clearance adjustment, integrated gearbox of 2.43 reduction ratio and fully redundant electronic engine management system (EMS) which includes fuel injection, ignition, etc.

All engine systems (fuel, electrical, cooling) are assembled in accordance with Rotax-912 i SERIES engine operation and installation manuals.

7.5 Propeller

A-32 airplane may be fitted with any propeller, approved by Aeroprakt Ltd.

7.6 Fuel system

The fuel system (see **Fig. 3**) includes two wing fuel tanks 1 and 2 with filler inlets 3 and 4. Fuel comes from left and right fuel tanks via fuel lines 5 and 6 to double fuel valves 7 and 8, each opening/closing the feed and return line simultaneously. Then fuel is fed through fuel lines 9 and 10 to sediment separator 11. From the sediment separator through the fuel line 12, coarse filter 13 and then through the fuel line 14 the fuel is fed to inlet of the 1st (main) fuel pump 15 and then to the inlet of the 2nd (auxiliary) fuel pump 17. The 1st and 2nd fuel pumps together with the return valves 16 comprise a single module, located under the right pilot seat. From the outlet of the 2nd fuel pump the fuel is supplied with pressure via fuel line 18, then, through the fine fuel filter 19, to the rail injectors 21 of the cylinders 1 and 3. Then through the tube 22 – to the rail injectors 23 of the cylinders 2 and 4, outlet of which is joined with fuel pressure regulator 24. The fuel pressure regulator ensures constant fuel pressure in the range of 2.8-3.2 bar (42-45 psi) in rail injectors with regard to the air pressure in the intake manifold. From the outlet of the fuel pressure regulator the excessive fuel is returned through the low pressure return line 25 and T-connector to the fuel tank 1 or 2 through the fuel line 27 or 28 depending upon which of the fuel valves 7 or 8 is opened. Fuel pressure before the engine is controlled using the fuel pressure sensor 20, installed immediately after the fine filter 19. The fuel tanks have vent tubes 31 and 32 installed in the fuel tank inlet caps. Fuel can be drained from the tanks on the ground via the drain valve 29, handle of which is accessible outside fuselage.

	Standard	Optional
Capacity of tanks:	2×45 l (11.9 US gal)	2×57 l (2×15.05 US gal)
Total fuel capacity:	90 l (23.8 US gal)	114 l (30.1 US gal)
Total usable fuel:	88 l (23.3 US gal)	112 l (29.6 US gal)
Non-usable fuel:	2 l (0.5 US gal)	2 l (0.5 US gal)

CAUTION! If air gets to the fuel lines then starting the engine may take quite a long time (several dozens of seconds). For that reason it is strictly not allowed to empty completely any of the fuel tanks in flight.

WARNING: Using fuel grades with ethanol additive content over 5% will deteriorate the condition and shorten the service life of the composite fuel tanks.

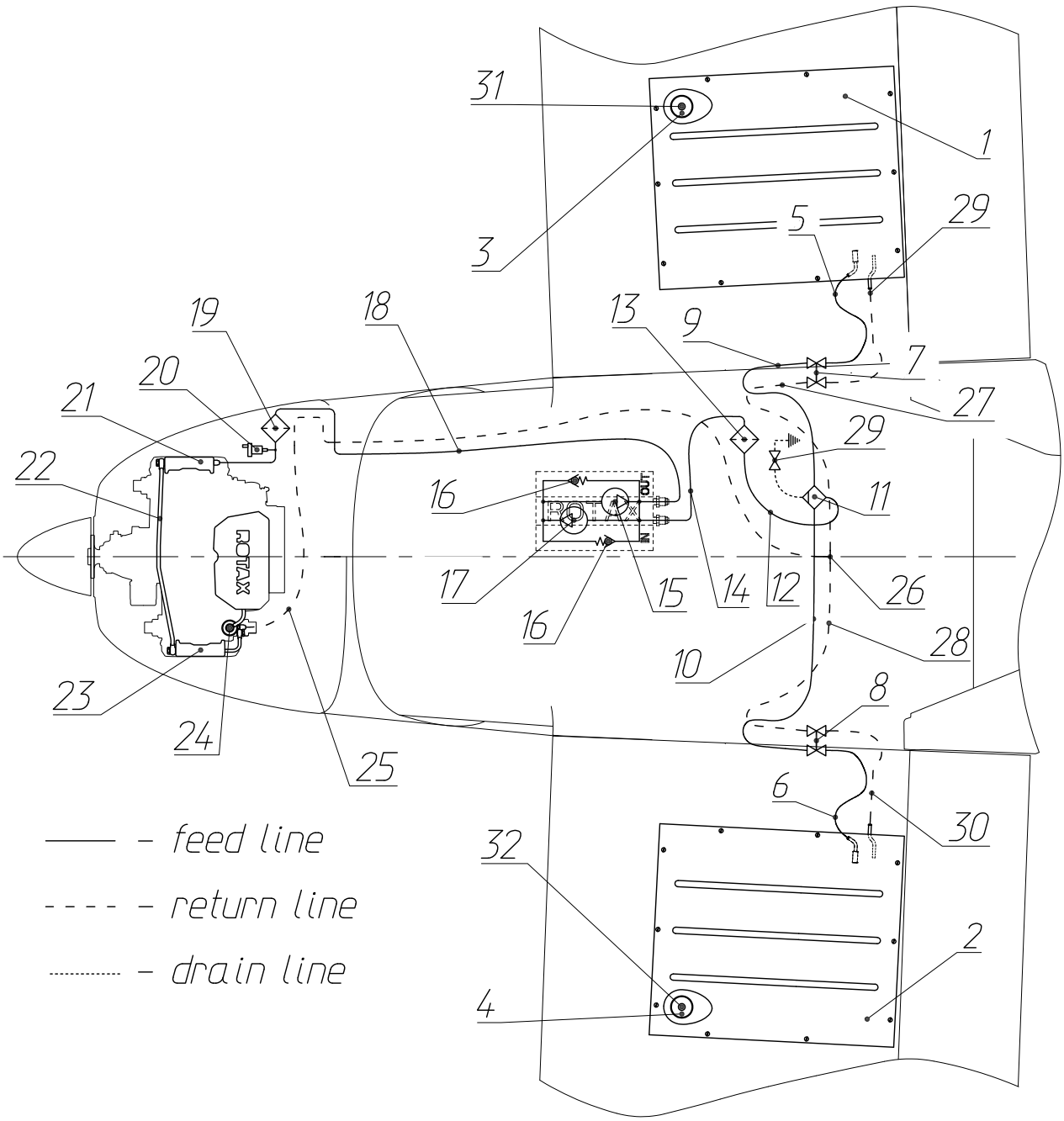

Fig. 3. Fuel system schematic

Fuel pressure: maximum permissible — 7 bar (101.5 psi);
Fuel pumps: nominal voltage — 12 V;
capacity — approx. 120 l/h (31.7 gal/h);
pressure — min. 4.5 bar (65.3 psi) (absolute pressure).

7.7 Airplane control systems

Airplane control systems include control systems for drooping ailerons (flaperons), elevator with trim tab, rudder and nose wheel, engine and brakes.

The control system is combined consisting of foot- and hand-actuated subsystems.

Ailerons and elevator are hand-actuated and are controlled using yokes. The rudder and nose wheel control is foot-actuated using pedals.

7.7.1 AFHT control system

The all-flying horizontal tail (AFHT) control system (see **Fig. 4**) is combined, it consists of two &4.0 mm (5/32") cables, passing through a block of pulleys and a fairlead, bellcrank and pushrod.

“Push” and “pull” forces are applied by the pilot to the yoke (1) is passed via the control column (2) to the cables (3). Then via the bellcrank (4) located near the frame No.9, the control forces is passed to the pushrod (5) connected to the AFHT arm (6). The cables routing is ensured with a block of pulleys (7), located in front of the seat beam and fairlead (8) on the luggage container wall. The cable tension and AFHT incidence angle adjustment is ensured using the turnbuckles (9) located forward of the bellcrank (4).

AFHT deflection angles: 15±1° up and 5±1° down.

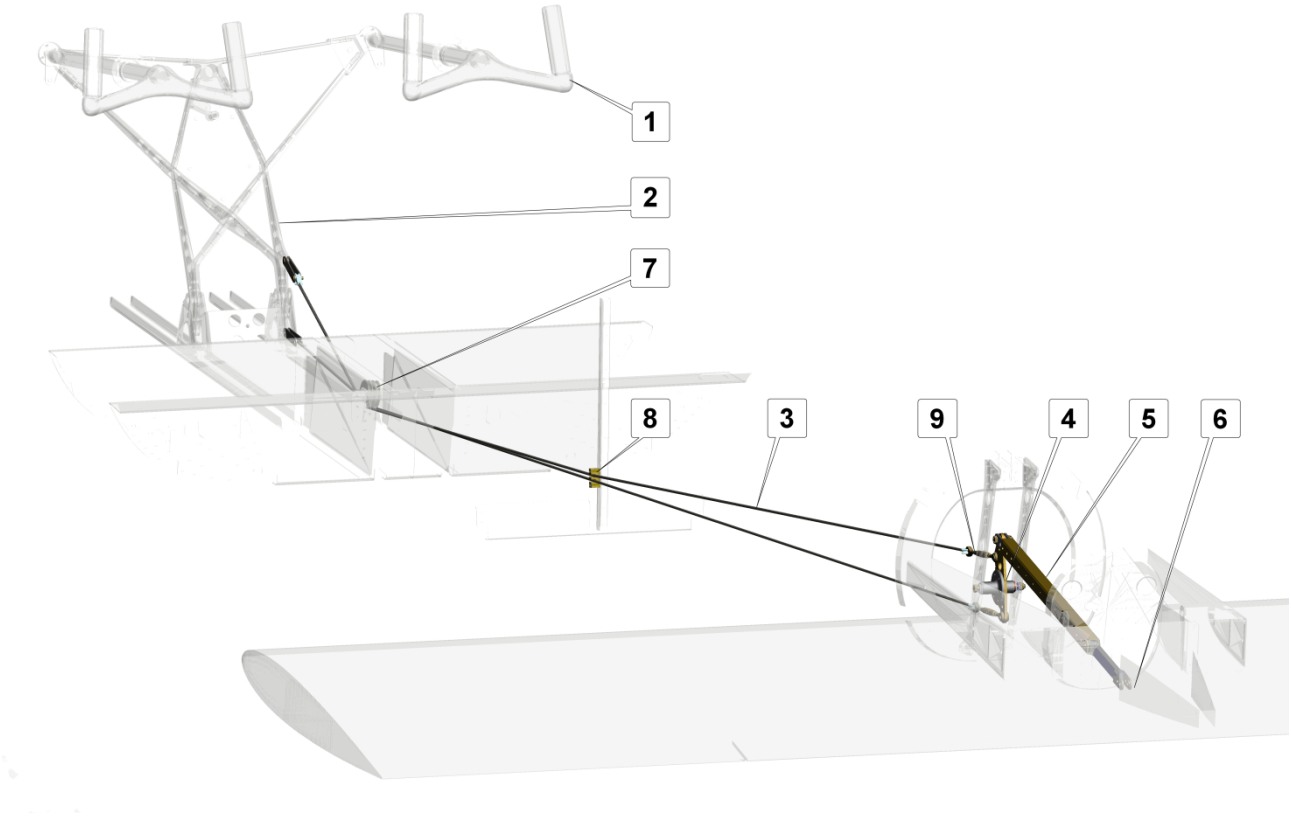

Fig. 4. AFHT control system

7.7.2 AFHT antiservo/trim tab control system

The AFHT antiservo/trim tab is used for controlling the force on control yokes in pitch.

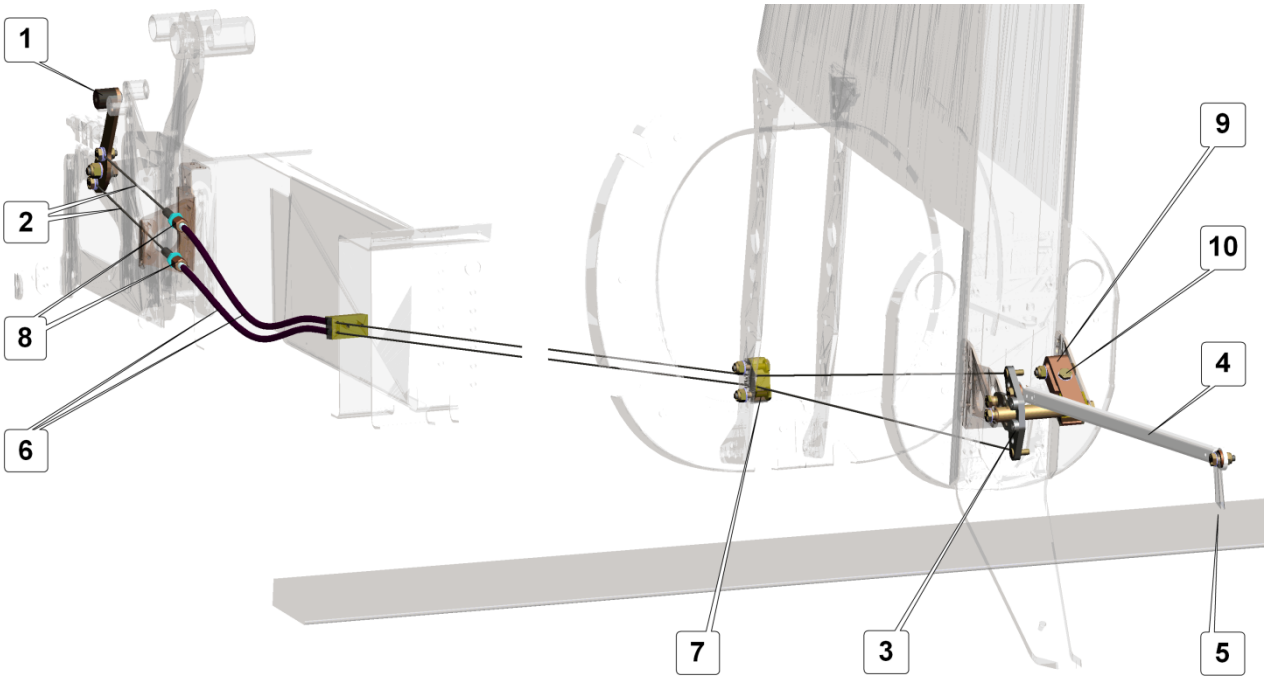

Fig. 5. AFHT antiservo/trim tab control system

The AFHT antiservo/trim tab control system (**Fig. 5**) is combined, it consists of a lever (1), two Ø1.5 mm (1/16 in) cables (2), a bellcrank (3), a friction clamp (9) and a rod (4).

The trim control lever (1) is located on the central console forward of the pilot seats and is accessible for both pilots. The trim tab control lever is connected with cables (2) to the trim tab control bellcrank (3). The cables are running through the flexible sheaths (6) in the central console and a fairlead (7) located near frame No.9. The antiservo/trim tab is hinged at the trailing edge of the AFHT.

Tension of the cables and antiservo/trim tab alignment can be ensured using the adjustable forward stops of the sheaths (8), located aft of the seat beam. The trim control lever friction force can be adjusted using the bolt (10) of the friction clamp (9), located on the bellcrank axle (3).

The antiservo/trim tab angles of deflection are: upward 7.4±1°, downward 7.6±1°.

7.7.3 Rudder and nose wheel control system

The rudder and nose wheel control system (**Fig. 6**) is combined, it consists of pedals, nose landing gear strut control bellcrank, two pushrods, two Ø2.5 mm (3/32 in) cables, passing through two front and two rear pulleys.

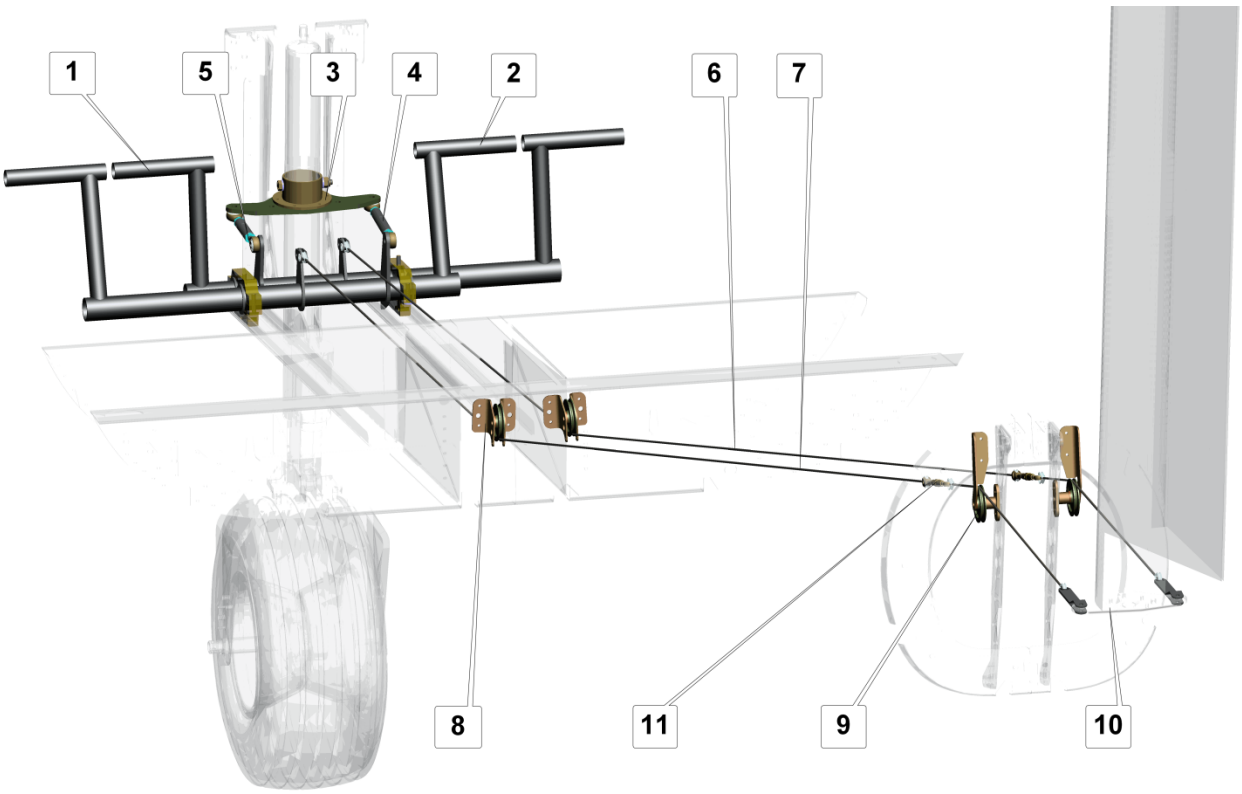

Fig. 6. Rudder and nose landing gear control system

The front (right) pedals (1) and rear (left) pedals (2) are fixed with nylon supports to longitudinal beams of the cockpit floor. The bellcrank (3) attached to the nose landing gear strut is connected to the pedals with the right (4) and left (5) pushrods. The right (6) and left (7) cables connect the pedals to the rudder arms. The cable routing is ensured with two pulleys (8) on the frame No.3 and two pulleys (9) near the frame No.9.

Adjustment of the nose landing gear position is achieved with pedals set to neutral position using pushrods (4) and (5). The cable tension and adjustment of the rudder position is achieved using the turnbuckles (11) located near the frame No.9.

In its neutral position the rudder is deflected to the right by the angle of +2.5° (to the right) for compensation of the engine torque. The rudder deflection angle to each side is 25±1°.

7.7.4 Control system of flaperons (drooping ailerons)

The airplane is equipped with flaperons (drooping ailerons), which serve as both ailerons and flaps. The flaperon control system ensures independent function of flaperons as ailerons and flaps by means of aileron drooping (flap extension) mechanism. The flaperon control system (**Fig. 7**) is combined and, beside the aileron drooping mechanism, it includes two yokes, control column, two control column pushrods, control column bellcrank, two Ø2.5 mm

(3/32 in) cables, passing through a system of pulleys, two inner and two outer bellcranks, two inner and two outer pushrods.

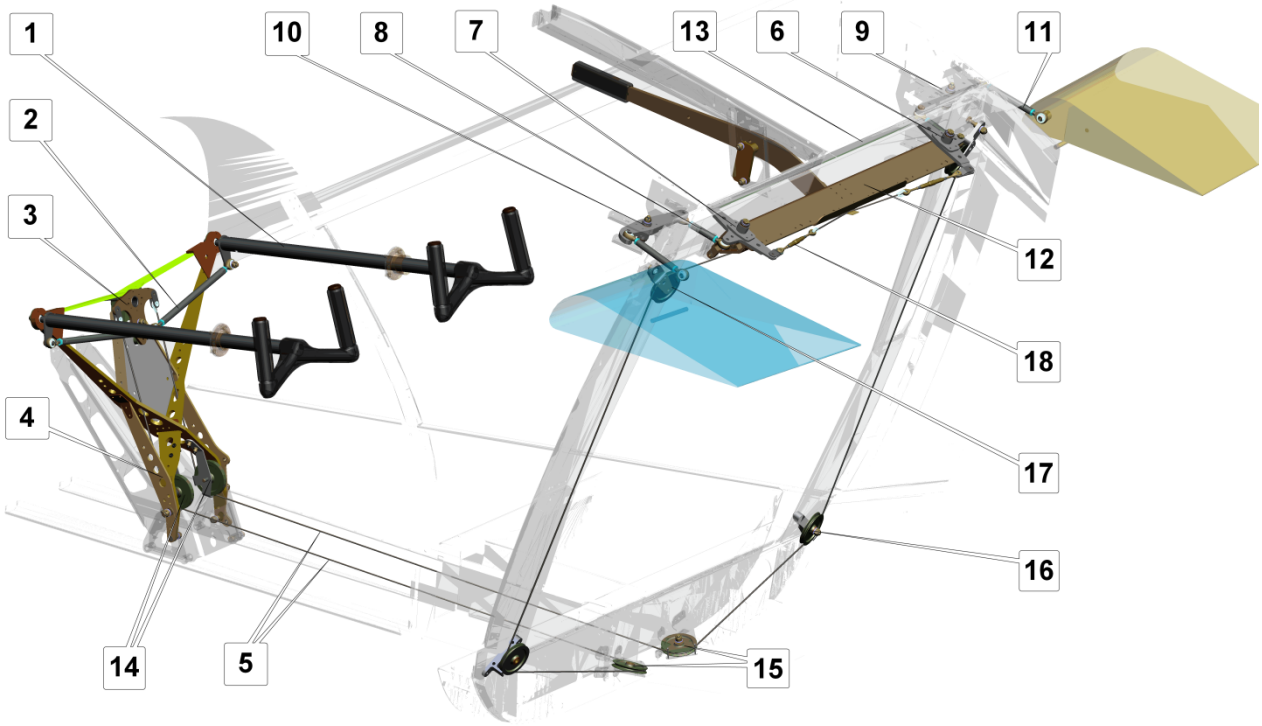

Fig. 7. Control system of flaperons (drooping ailerons)

The control force in roll applied by the pilot to the yoke 1 is passed via the pushrods (2) to the bellcrank (3) located on the control column (4). Then via the cables (5) the force is passed to the inner right (6) and left (7) bellcranks, via the inner pushrods (8) to the outer right (9) and left (10) bellcranks. Then the control force is passed from the outer bellcranks to the flaperons via the outer pushrods (11). The inner bellcranks hinged on the flap extension mechanism beam (12) are connected to each other with the pushrod (13). The cables are routed using two pulleys (14) on the control column, two pulleys (15) aft of the frame No.3 low in the middle, two pulleys (16) aft of the frame No.3 low on the sides, and two pulleys (17) on the frame No.3 up near the rear wing attachment points.

The cable tension and flaperon position adjustment is achieved using the turnbuckles (18) located near the inner bellcranks (7).

Deflection angles of the flaperons (as ailerons): up – 15.5±1°, down – 11.5±1°.

The aileron drooping (flap extension) mechanism (**Fig. 8**) consists of a beam with lever (1) hinged to the upper rim of the frame No.3. Flap position setting is achieved with the fixer (2) having three holes for the pin (3) on the lever. Unfixing is achieved by bending the spring-like lever to the right. After the pin comes out of the fixer hole the lever can be set to the selected position. When the pin aligns with another hole of the fixer the lever springs back fixing the flaperons in a different position.

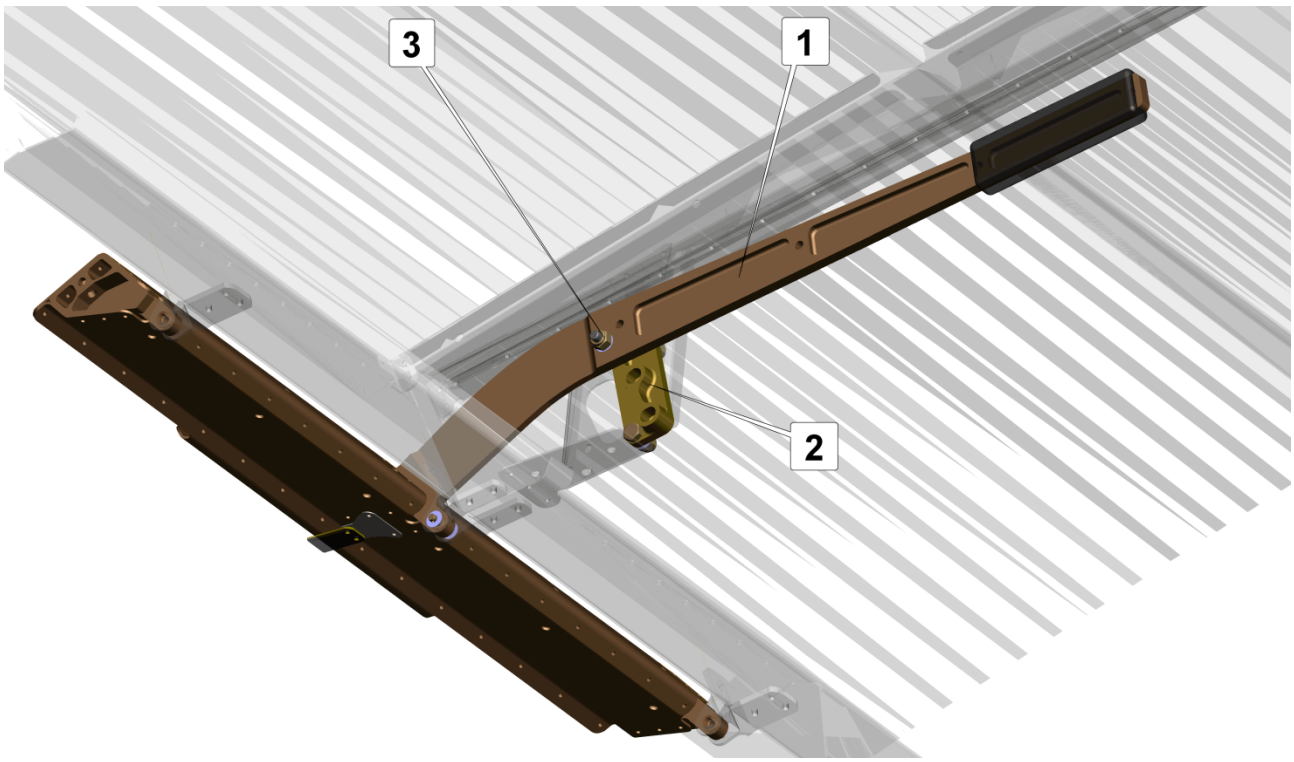

Fig. 8. Flap extension mechanism

Aileron drooping (flap extension) angles: 1st position – 10±1°.

7.7.5 Engine controls

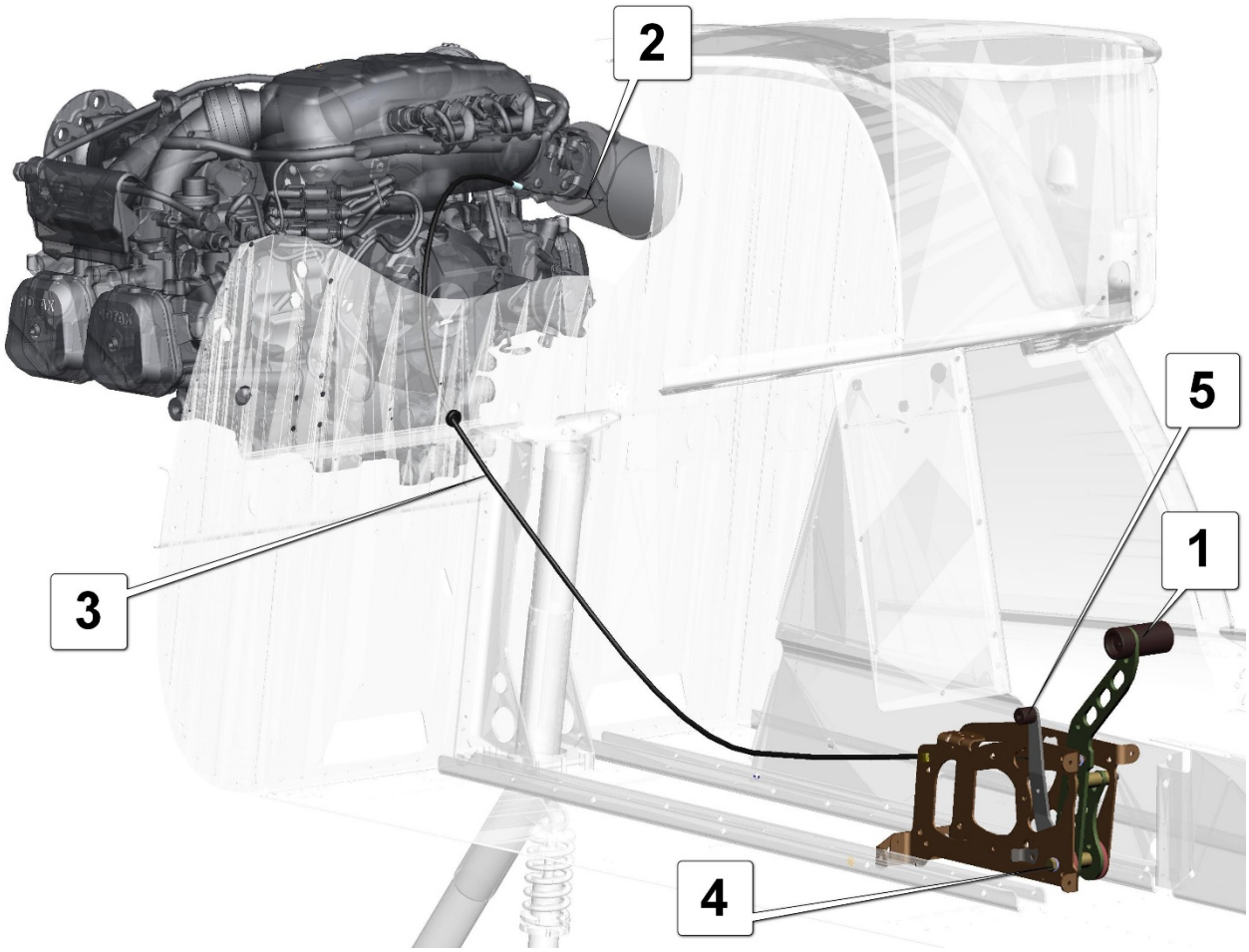

Fig. 9. Engine RPM controls

Rotax-912-iS-Sport engine is equipped with an electronic control unit (ECU) for fuel injection into intake manifolds immediately before the intake valves. The ECU generates signals for fuel injection and mixture ignition according to the programmed algorithms and data from a number of sensors, including the throttle valve position sensor. Engine speed is controlled by moving the throttle valve from closed to fully open position using the throttle lever 1 (**Fig. 9**) connected with the cable to the throttle control arms (2). The cables are passed through the flexible sheaths (3). The throttle lever friction force can be adjusted on the ground by tightening the bolt (4) or in flight – using the friction force adjusting lever (5).

Rearmost throttle lever position corresponds to MIN engine RPM, the foremost position – to MAX engine RPM. Pulling the friction force adjusting lever back increases the throttle lever friction, pushing it forward – reduces.

7.7.6 Brake control system

The main wheel brakes (**Fig. 10**) are actuated hydraulically using the brake lever (2) (installed next to the throttle lever 3) controlling the pressure supplied from the master cylinder (1) to the slave cylinders (5) in the wheels.

The main LG wheels have disk brakes. The cylinders are connected to each other with copper tubing 6 with outside diameter of 3 mm. The master cylinder (1) is connected with a hose (8) to the extension tank (7), installed on the firewall in the engine compartment.

When the brake lever is pulled the brake pads squeeze the brake disc creating the braking moment proportional to the applied force.

A-32 is equipped also with a parking brake, which is actuated with a lever (4) on the central console. To use the parking brake, set the lever to 'Parking brake ON', then pull and release the brake lever. The brake pads will remain pressed to the brake disc. To release the parking brake set its control lever to its initial position ('Parking brake OFF').

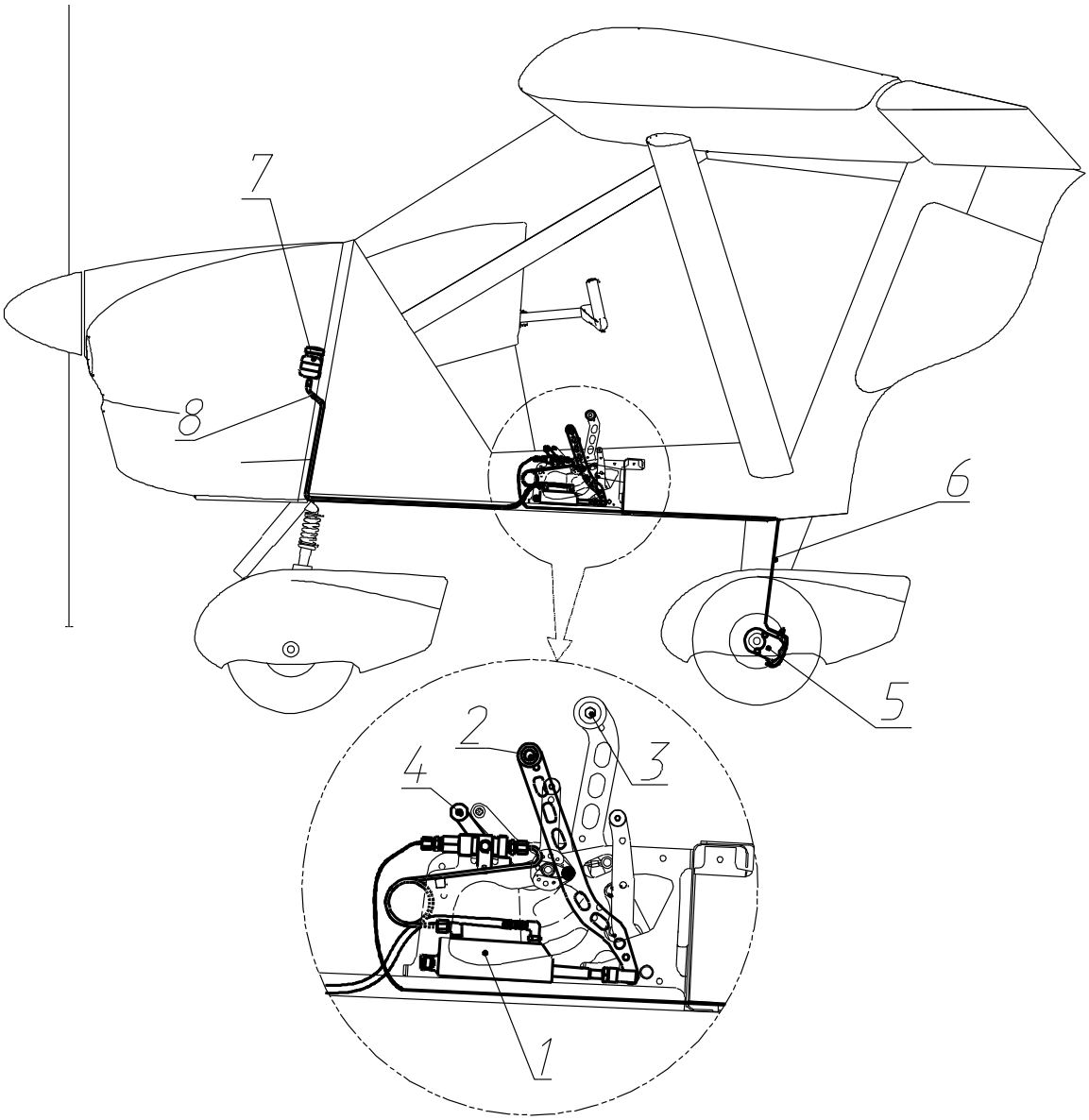

Fig. 10. Brake control system

7.8 Instrument panel

This airplane has the following flight instruments set and instrument panel arrangement:

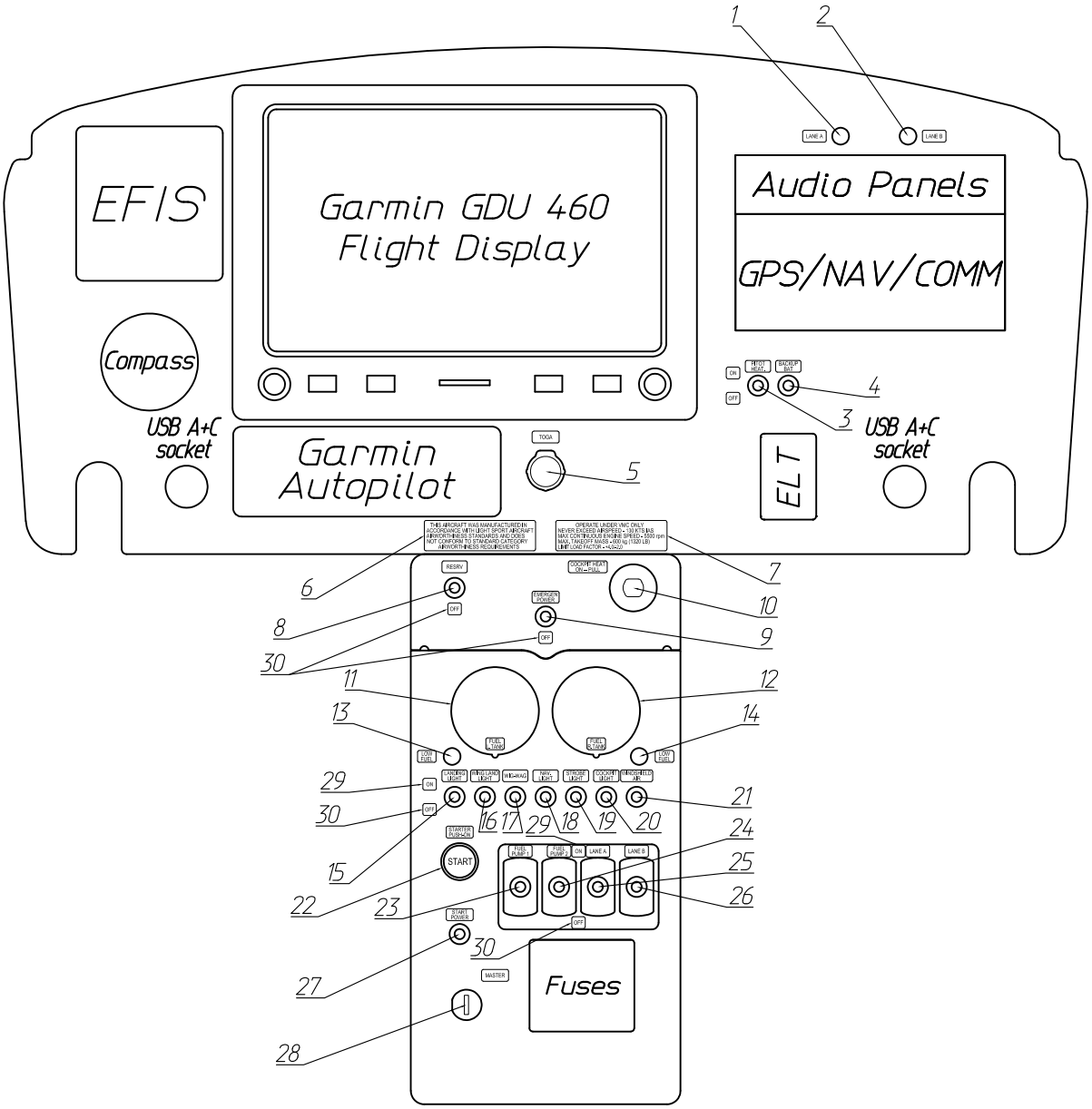

Fig. 11. Instrument panel

Numbers in **Fig. 11** denote the following:

1. LANE A indicator and marking
2. LANE B indicator and marking
3. Pitot heat switch and marking
4. Backup battery switch and marking
5. TOGA button and marking
6. Placard with passenger warning:

   THIS AIRCRAFT WAS MANUFACTURED IN
   ACCORDANCE WITH LIGHT SPORT AIRCRAFT
   AIRWORTHINESS STANDARDS AND DOES NOT
   CONFORM TO STANDARD CATEGORY
   AIRWORTHINESS REQUIREMENTS
7. Placard with operating limitations:

   OPERATE UNDER VMC ONLY
   NEVER EXCEED AIRSPEED - 130 KTS IAS
   MAX CONTINUOUS ENGINE SPEED - 5500 rpm
   MAX. TAKEOFF MASS - 600 kg (1320 LB)
   LIMIT LOAD FACTOR - +4.0/-2.0
8. Reserved switch and marking
9. EMERGENCY POWER switch and marking
10. Cockpit heating control knob and marking
11. Left tank fuel level indicator and marking
12. Right tank fuel level indicator and marking
13. Left tank “Fuel Low” warning light and marking
14. Right tank “Fuel Low” warning light and marking
15. Landing light switch and marking
16. Wing land light switch and marking
17. WIG-WAG switch and marking
18. Navigation lights switch and marking
19. Strobe lights switch and marking
20. Cockpit light switch and marking
21. Windshield air fan switch and marking
22. Starter button and marking
23. FUEL PUMP 1 switch and marking
24. FUEL PUMP 2 switch and marking
25. LANE A switch and marking
26. LANE B switch and marking
27. START POWER switch and marking
28. Master key and marking
29. ON marking for electric and ignition switches
30. OFF marking for electric and ignition switches

7.9 Full and static pressure system

The full and static pressure probe (1) (see **Fig. 12**) is located on the left wing strut. It supplies the air pressure to the altimeter and the airspeed, vertical speed (if installed), angle of attack (if installed) indicators (6).

This system supplies the full (dynamic) and static pressure of the outside air to the instruments measuring the flight parameters: airspeed, rate of climb, altitude and angle of attack. The system consists of the full and static pressure probe (1) and full (2, 3) and static (4) pressure lines connecting the probe to the instruments. Full and static pressure lines have joints (5) used to disconnect the lines when the left wing is removed during aircraft disassembly.

The full (2) and static (3) pressure lines are connected to the airspeed indicator. The altimeter and vertical speed indicator are connected to the static (3) pressure line. The full (2) and (3) pressure lines are connected to the angle of attack indicator.

Good condition of the full and static pressure system is important for correct measurement of the flight parameters and therefore for flight safety. Pilots must take all measures necessary to keep the system in good condition. During the preflight check pilot must remove the cover from the full and static pressure probe and inspect the probe and lines to make sure that they are not damaged or blocked (by water, ice, dirt, etc.). After flight pilot must put the cover back on the probe.

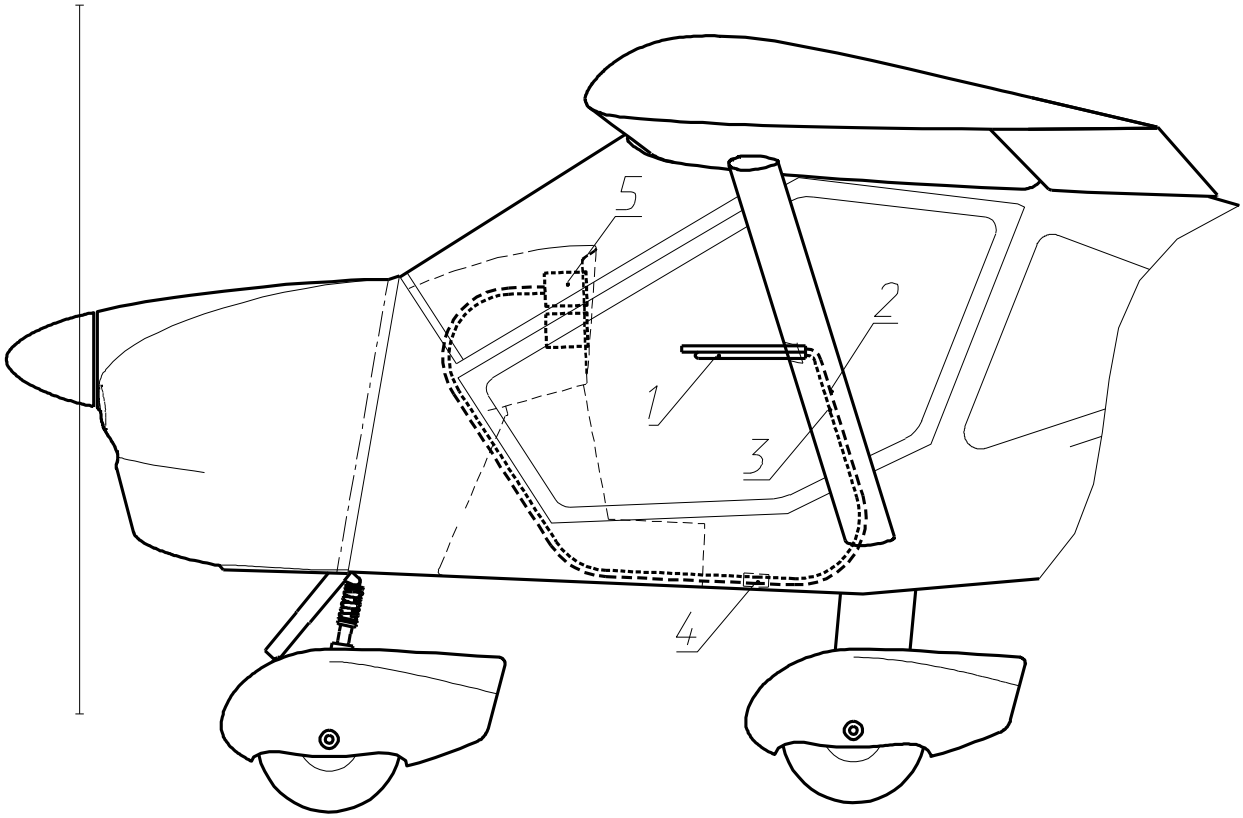

Fig. 12. Full and static pressure system

7.10 Electrical system

Electrical system of A-32 serves for generation of electrical power and supplying it to the onboard electrical consumers.

When engine is running (at RPM above 1400), electrical power is generated by the engine alternator, converted by a rectifier-regulator (located on the firewall) and is supplied to the consumers and stored in a 12V DC 18Ah battery, located behind the left pilot seat. The consumers (engine starter, instruments, lights, etc.) are supplied with the electrical power through the electrical cables of appropriate section (depending on the consumed current), switches and fuses (located on the instrument panel). The fuses are required to protect the electrical system and consumers from short circuit and must be of appropriate type and size.

When battery is supplying power to the consumers while alternator is not generating and supplying power to the battery (e.g. engine is not running or due to some other reason) NO CHARGE light signals that the battery is discharging and its power may be lost after some time. When alternator starts recharging the battery NO CHARGE light goes out.

MASTER switch controls power supplies of all onboard consumers (except for the engine ignition system and consumers with their own built-in power source, e.g. GPS) together with the electrical switches for separate consumers. The engine ignition system may be switched ON/OFF only with the ignition switches.

Electrical system wiring depends on the electrical equipment/instruments installed in the aircraft and therefore has main and additional (optional) portions. The respective wiring diagrams are shown on **Fig. 13** to **Fig. 27**.

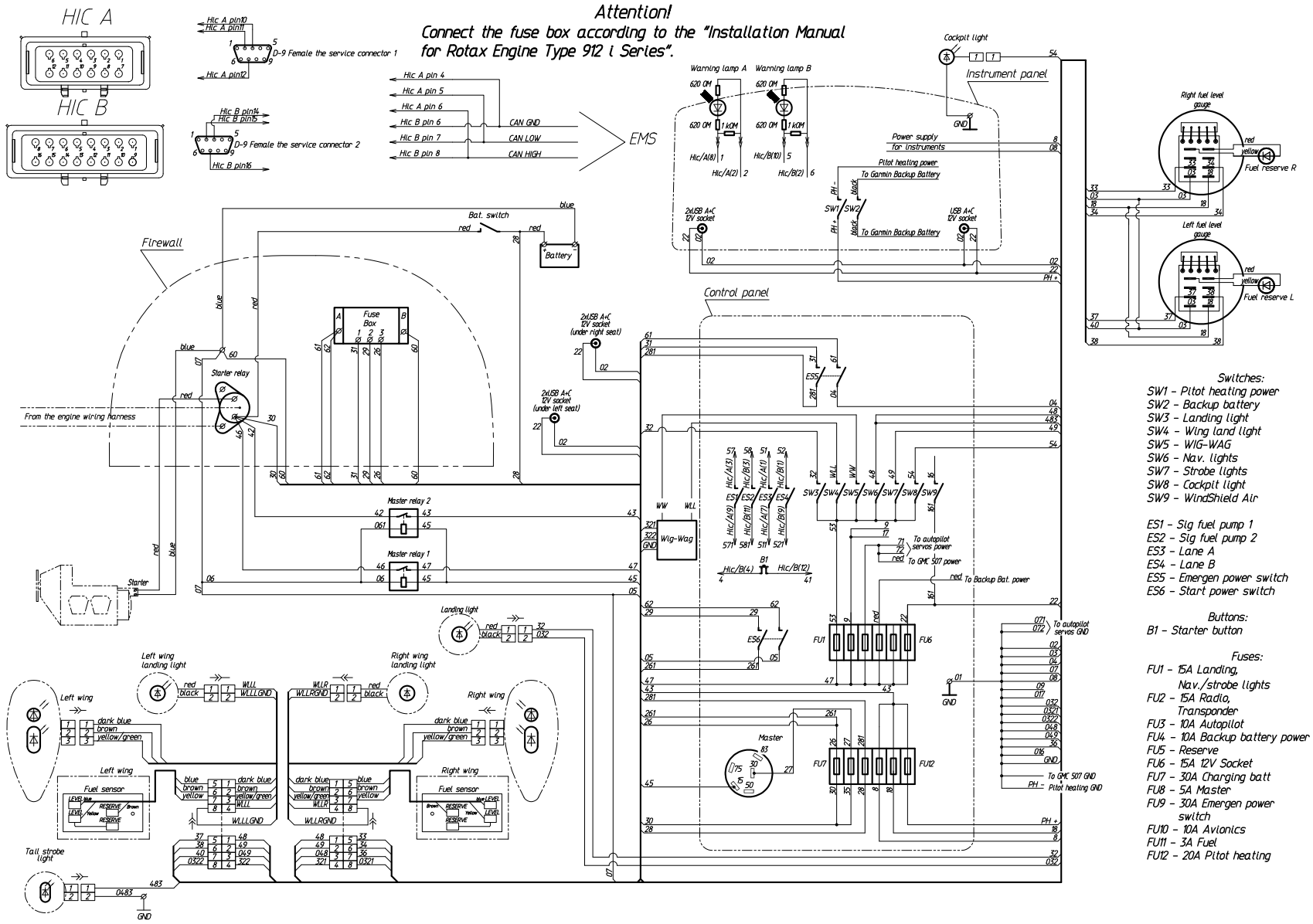

Fig. 13. Wiring diagram of A-32 electrical system (main)

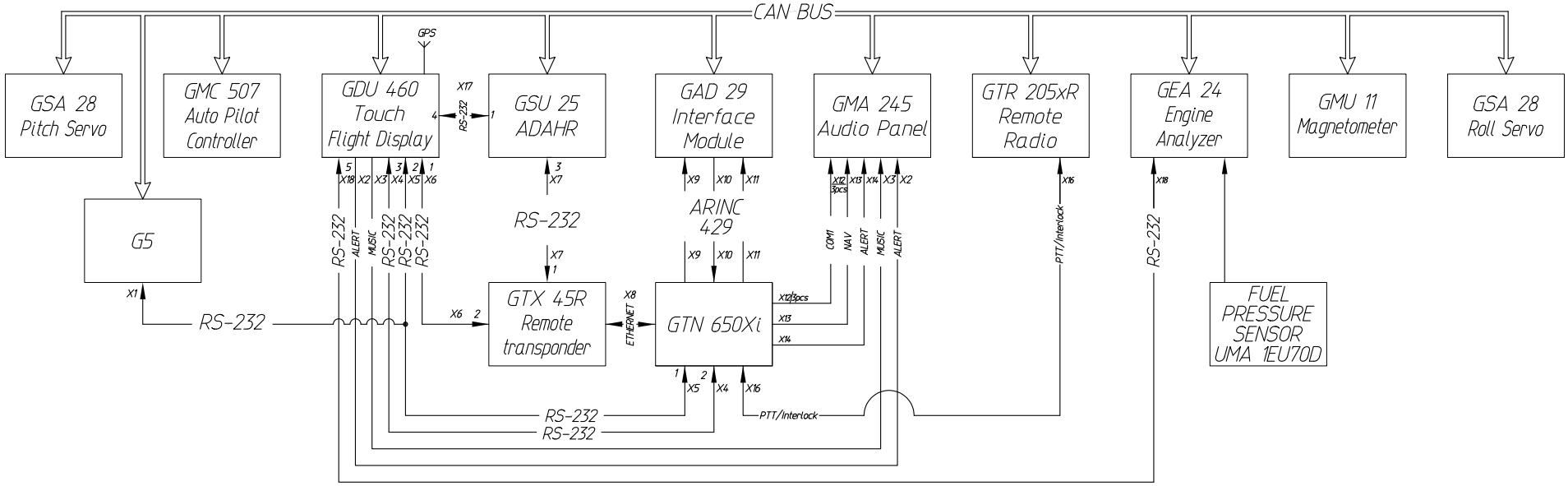

Fig. 14. Block diagram for installation of Garmin G3X system

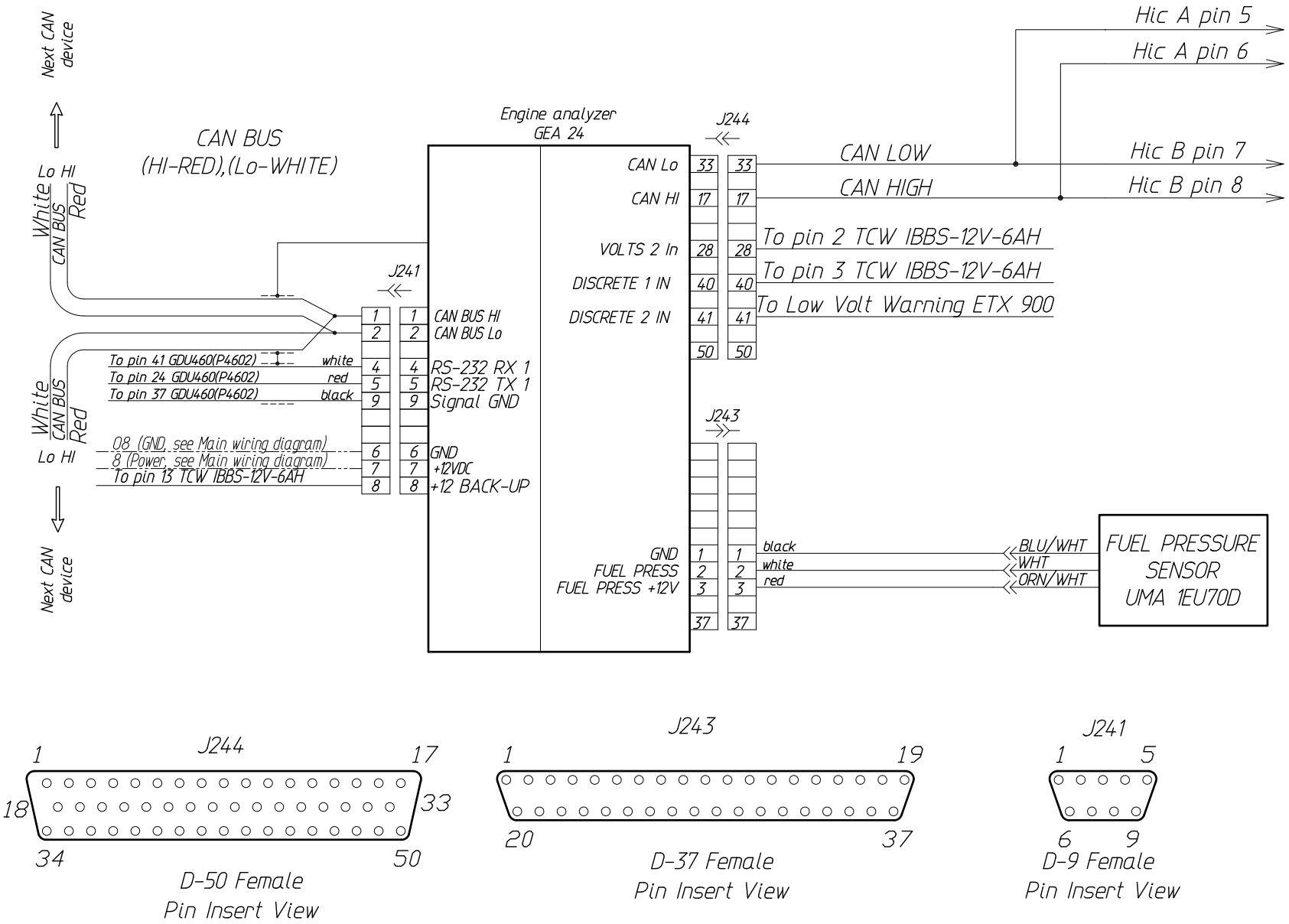

Fig. 15. Wiring diagram for installation of the Garmin GEA 24 engine analyzer

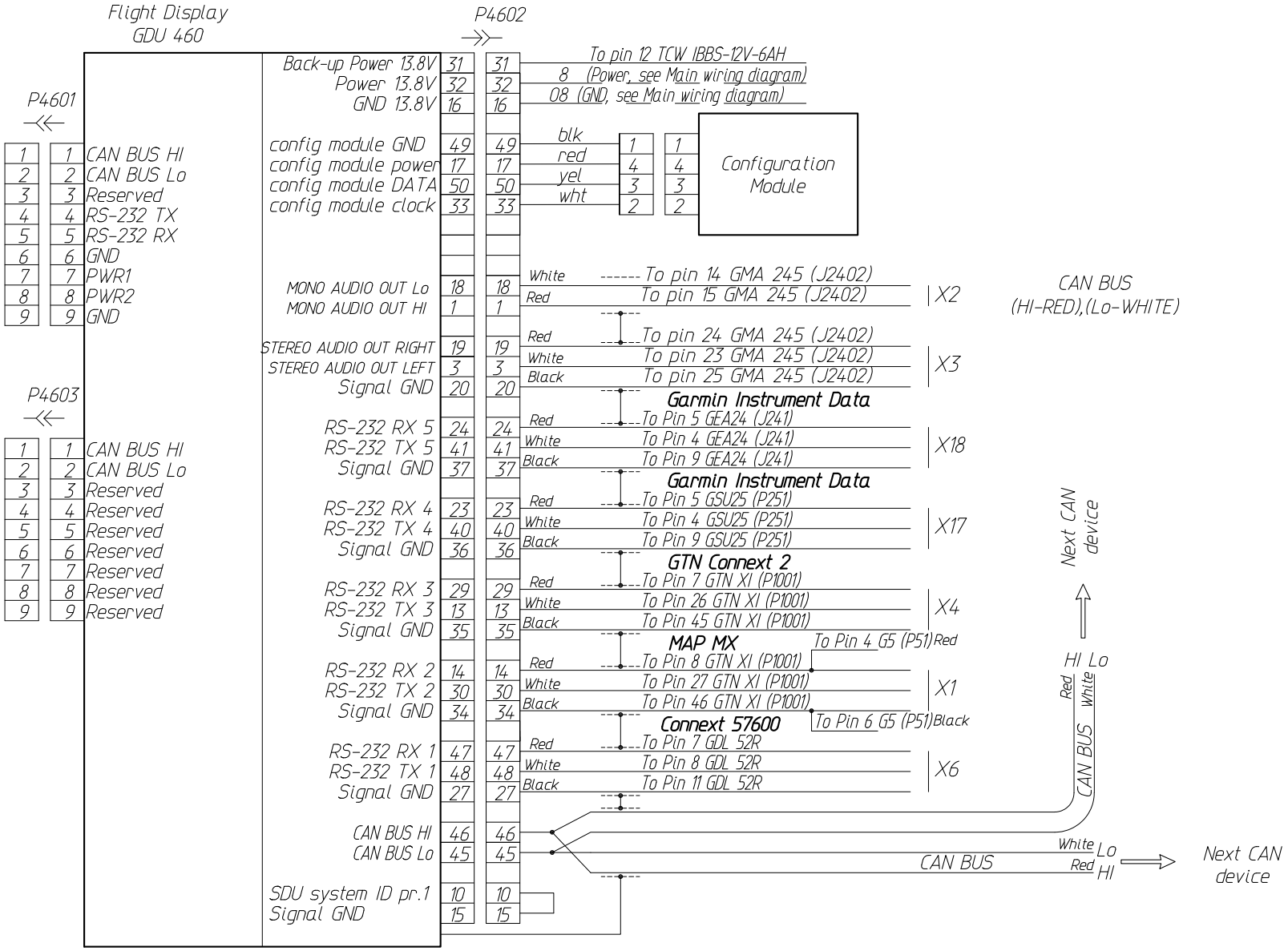

Fig. 16. Wiring diagram for installation of the Garmin GDU 460 flight display

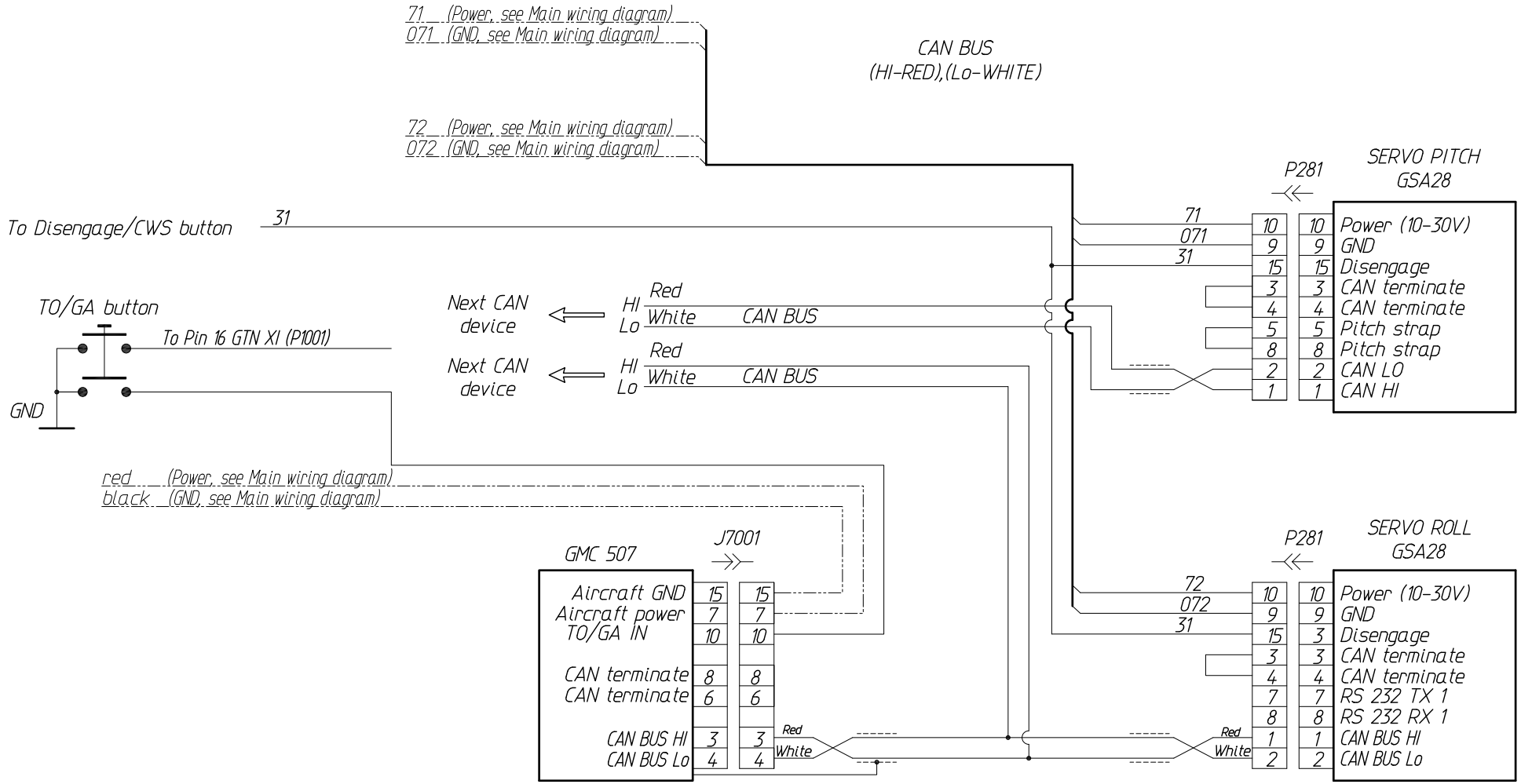

Fig. 17. Wiring diagram for installation of the Garmin autopilot

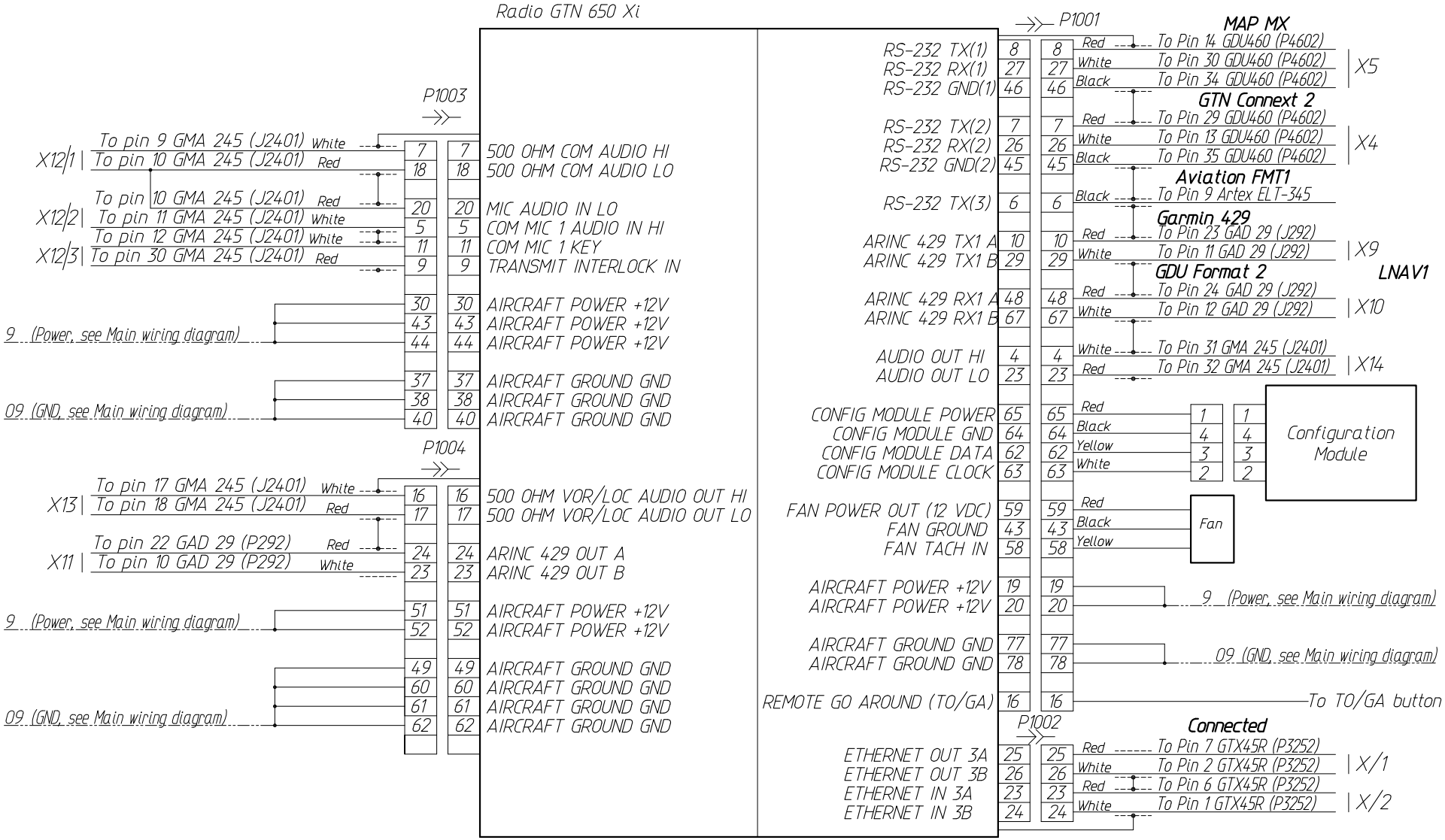

Fig. 18. Wiring diagram for installation of the Garmin GTN 650 Xi radio

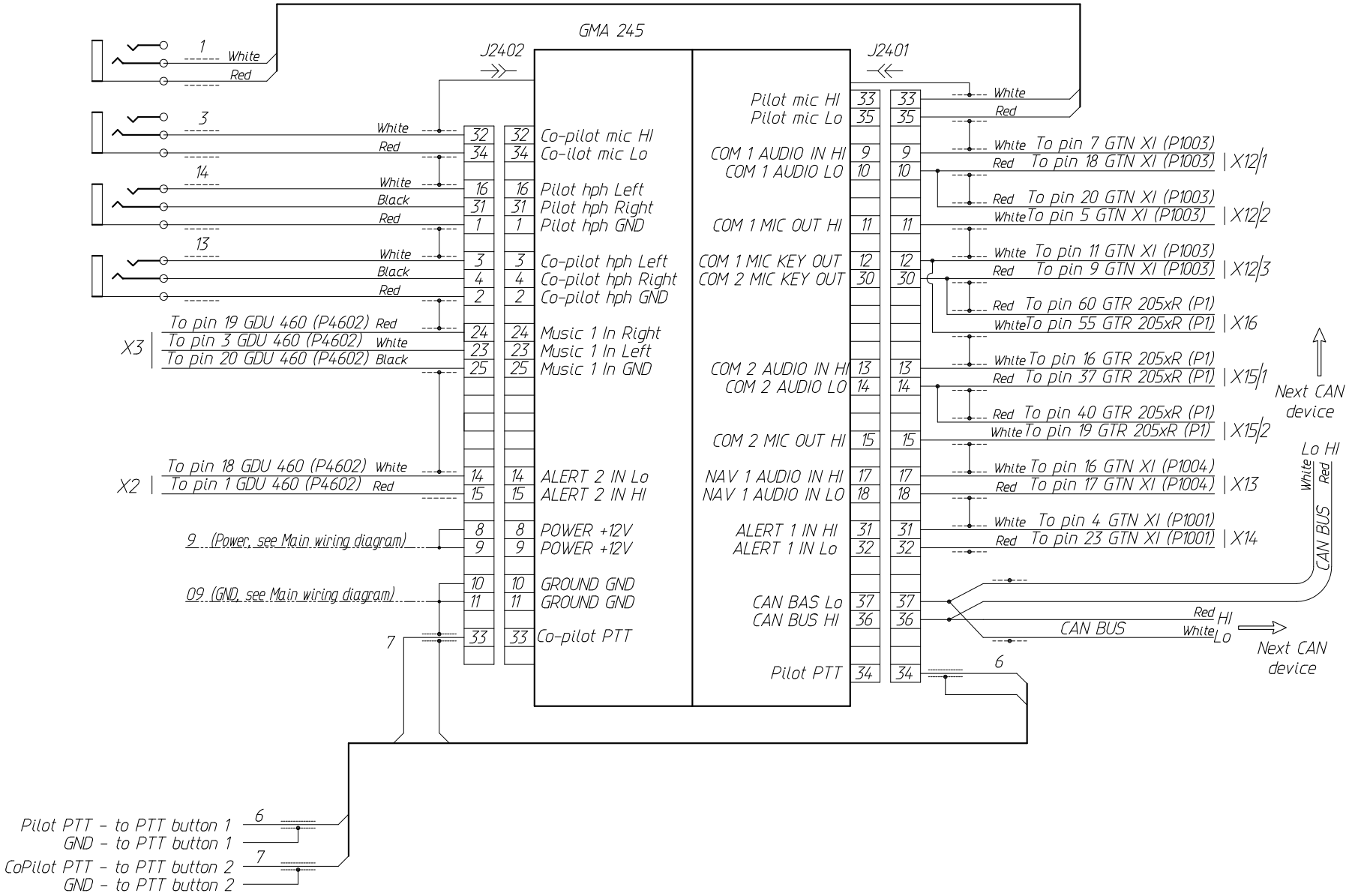

Fig. 19. Wiring diagram for installation of the Garmin GMA 245 audio panel

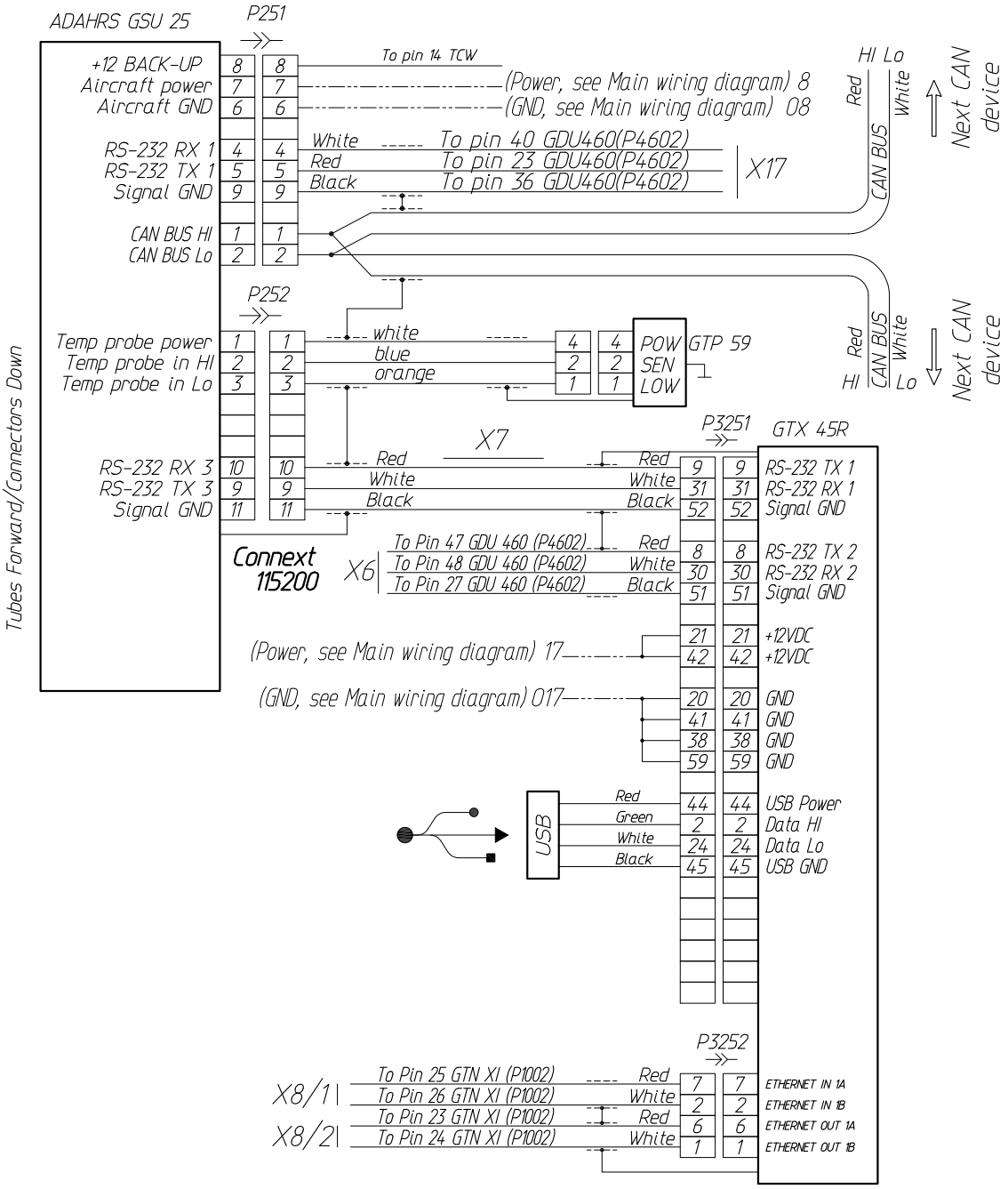

Fig. 20. Wiring diagram for installation of the Garmin GSU ADAHRS and GTX45R transponder

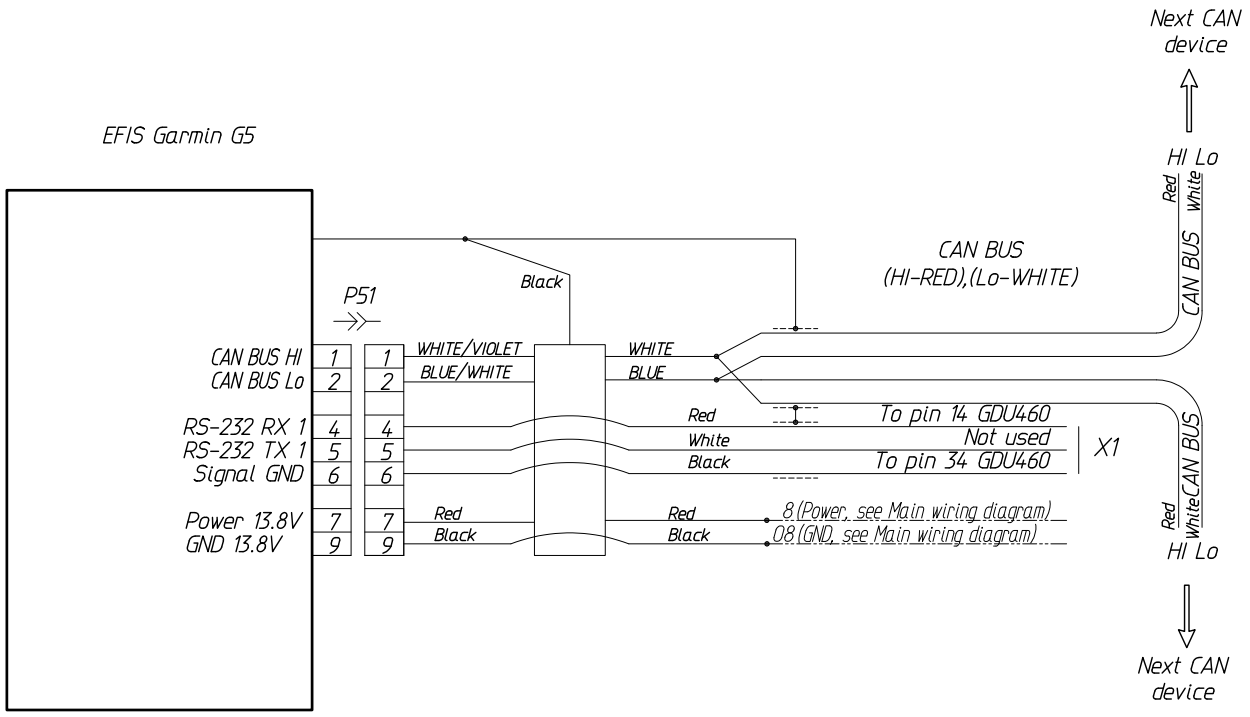

Fig. 21. Wiring diagram for installation of the Garmin G5 flight instrument

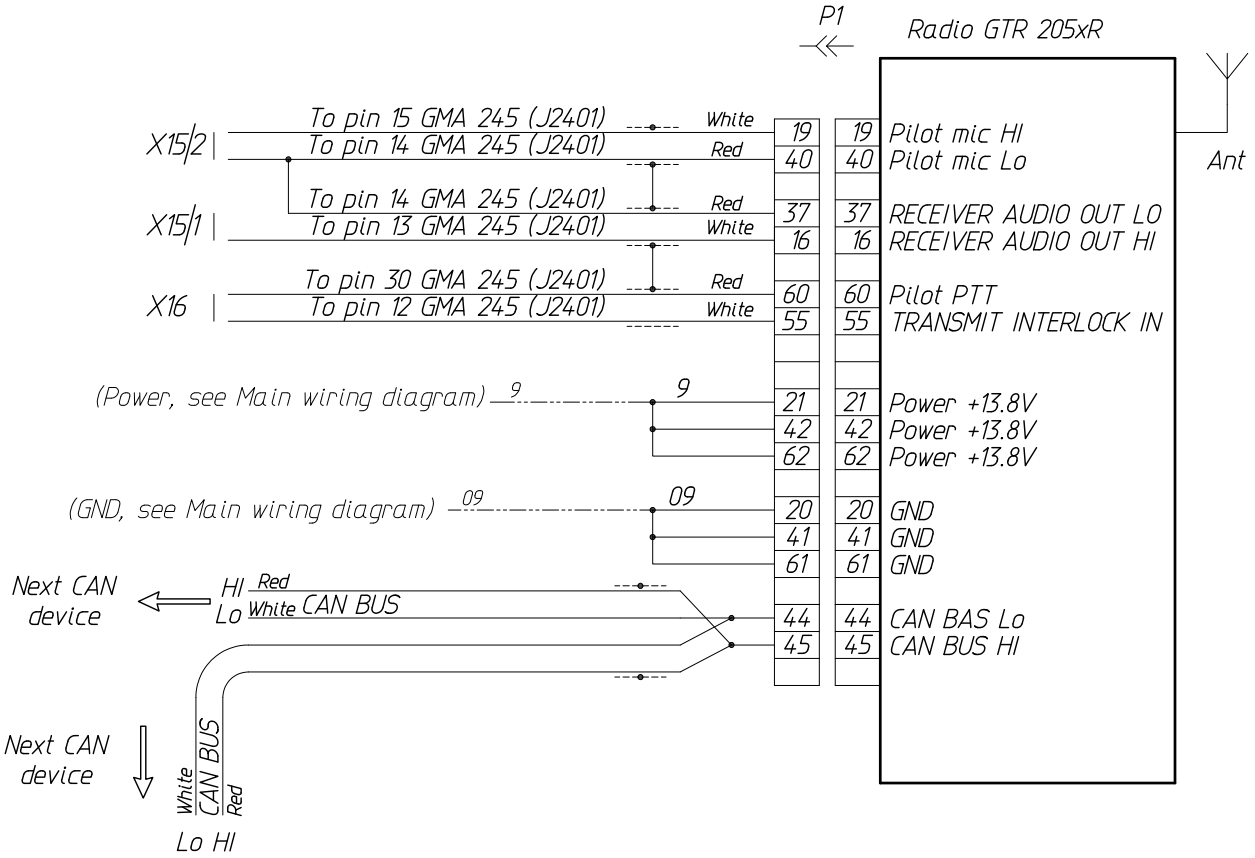

Fig. 22. Wiring diagram for installation of the Garmin GTR 205xR radio

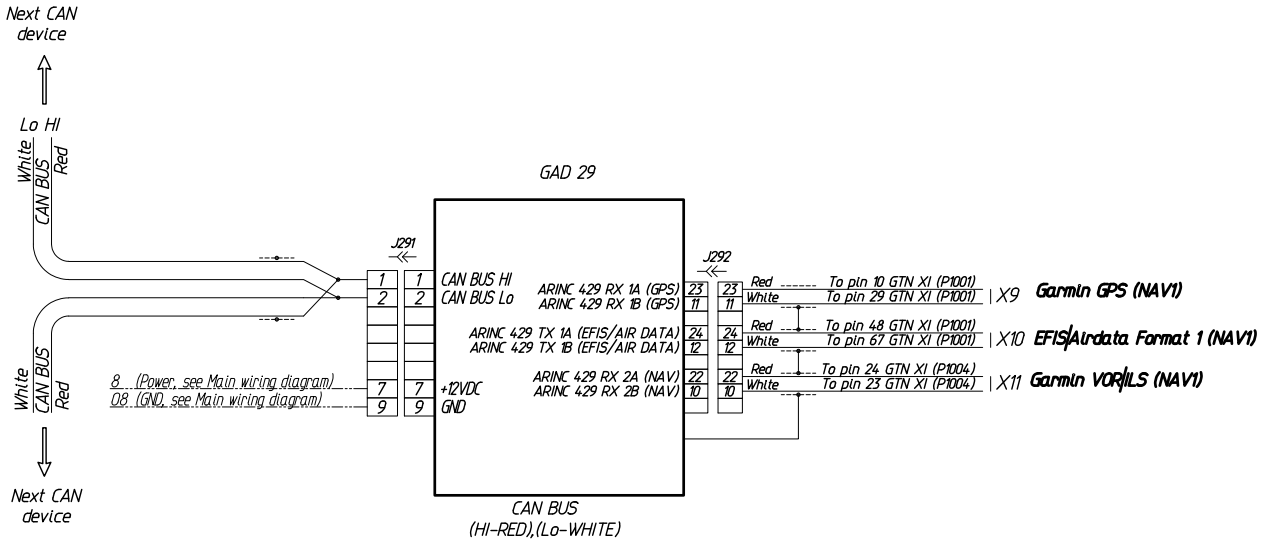

Fig. 23. Wiring diagram for installation of the Garmin GAD 29 adapter

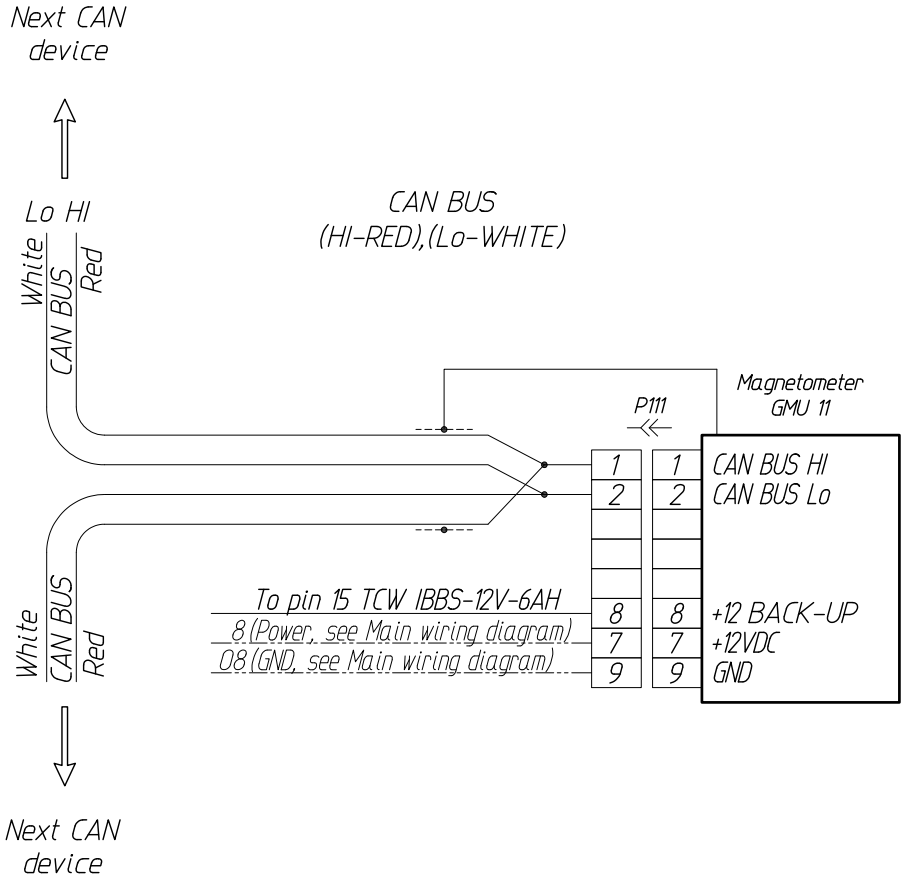

Fig. 24. Wiring diagram for installation of the Garmin GMU 11 magnetometer

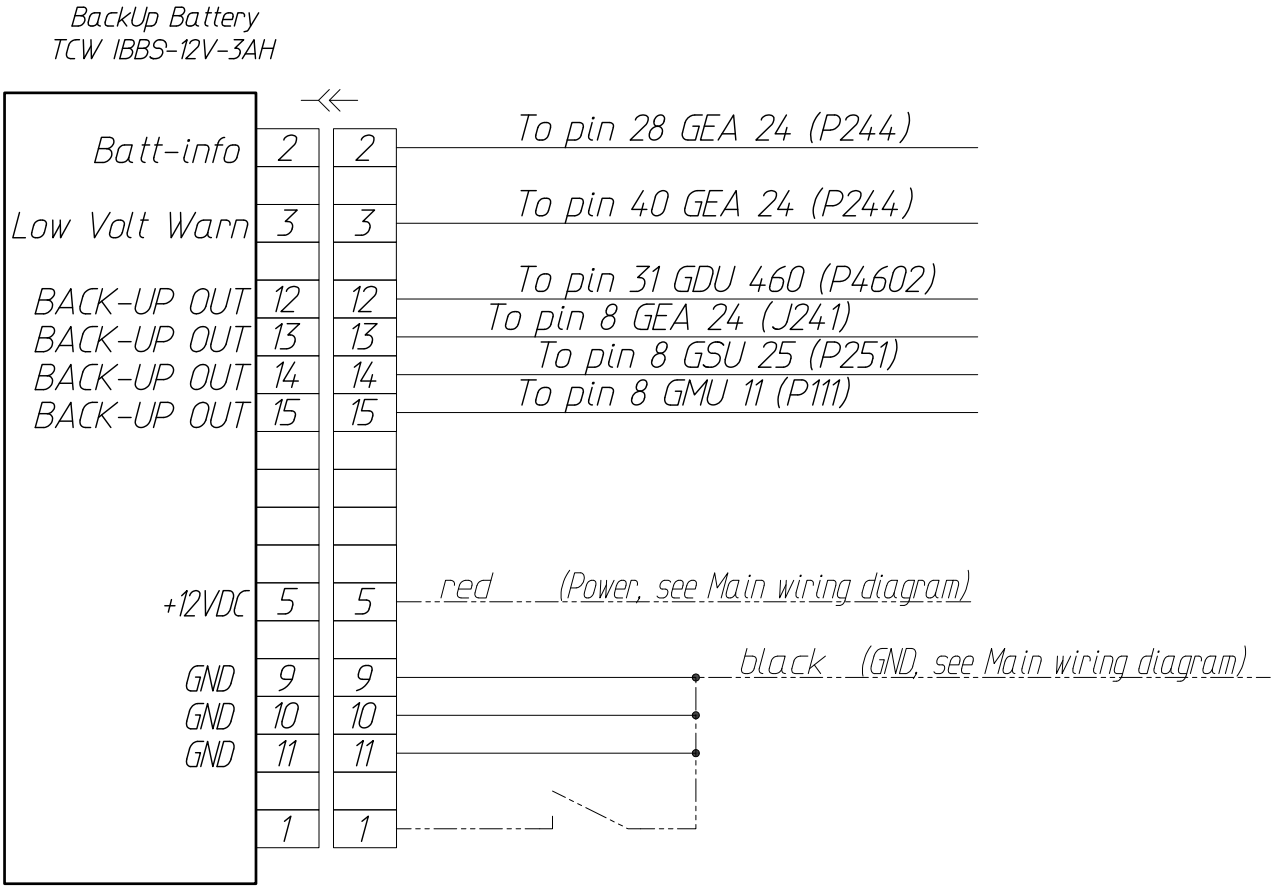

Fig. 25. Wiring diagram for installation of the Garmin backup battery

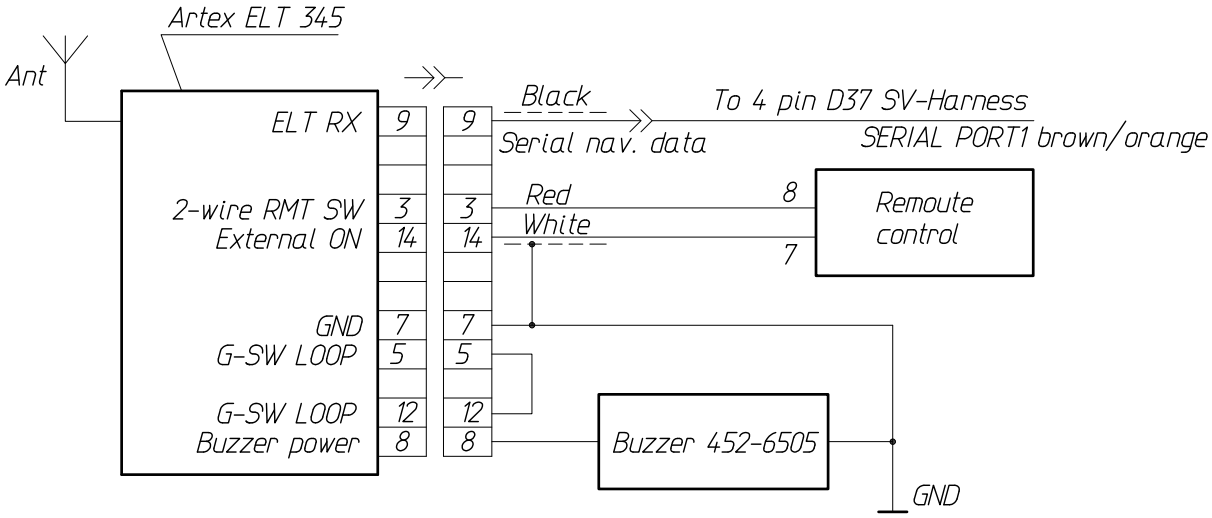

Fig. 26. Wiring diagram for installation of the Artex ELT 345

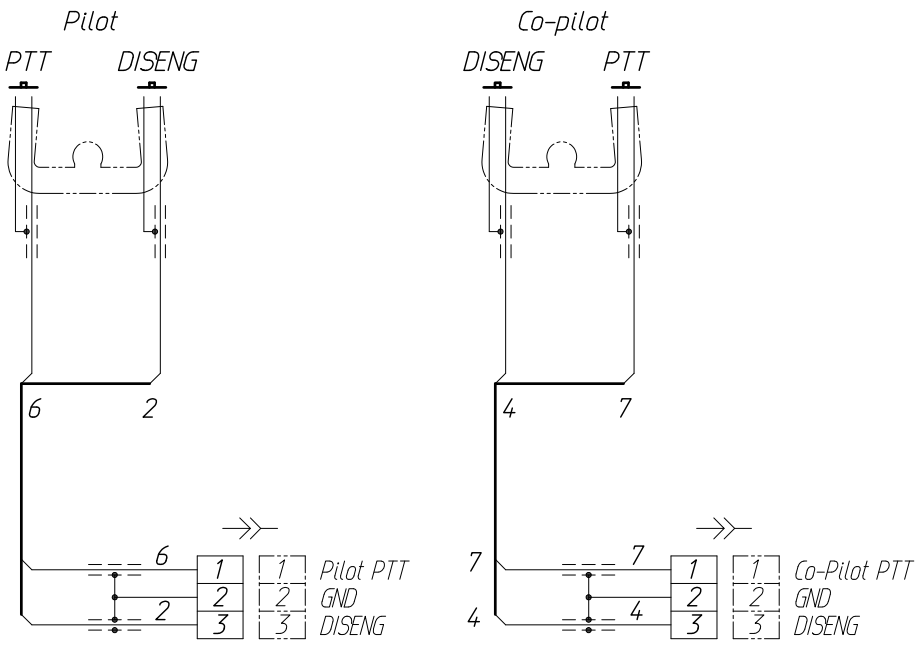

Fig. 27. Wiring diagram for installation of PTT buttons

7.11 Seats and harness belts

The airplane is equipped with adjustable 4-position seats with rigid structure and soft cushions. The seats are hinged at the front to a transverse beam and at the rear they are resting on nylon support at the lower part of the frame No.3. The seat can be readjusted or removed by pressing the springs of the fixing mechanism and taking the fixing pins out of the seat position adjustment holes. To fix the seat in a desired position align the respective seat position adjustment holes and the fixing pins with the springs of the fixing mechanism depressed and then release the springs (then the pins will move back to stops).

The harness belts system is of 4-point type. The shoulder belts are coming from the rear and up and are joined to the waist belts through adjustable buckles. The waist belts have also a lock.

Before climbing into the cockpit the pilots should adjust the seat position. After getting into the seats the pilots should fasten the belt locks and adjust the belts to their size.

The seats and harness belts properly adjusted and fastened do not restrict pilot motions necessary to control the airplane and ensure pilots' safety in flight and during airplane motion on the ground.

7.12 Cockpit doors

The cockpit doors consist of organic glass, attached to the metal tubular framework. The doors are hinged on top and open upward. In their open and closed position the doors are retained by pneumatic cylinders. Each door can be fixed in the closed position with a lock.

Both left and right doors have air scoops for ventilation, de-misting of the glass and providing pilot view for landing in poor visibility conditions (snow, rain, etc.).

7.13 Baggage compartment

A-32 has baggage compartment located behind the pilot seats and accessible from inside of the cockpit on the ground and in flight. The compartment is formed by the frame No.3 in front, by a rigid partition at the frame No.5 behind, by fuselage skin on the sides and bottom and by a fabric flap with zipper on top. The baggage compartment volume is 160 l (42 US gal). The weight of baggage in the compartment may not exceed 30 kg (66 lb).

7.14 Recovery system

This aircraft is optionally equipped with a quick-acting MAGNUM 601 S-LSA recovery system. The system is intended for rescue of pilots together with the aircraft in case of emergency situation in flight, when emergency landing is impossible (see section **3.2.5**)

Installation of the recovery system is shown on **Fig. 28**. The parachute packed into a soft container (1) is located behind the baggage compartment. To deploy the system pull the handle (2) of the ejection device connected with a cable (3) to the rocket housing (4). That launches the rocket which pulls out the parachute, attached with a rope (5) via a carabiner (6) to the cables (7) and (9) fastened to the attachment points (8) and (10). The locations of the attachment points and the cables' length are selected so that the aircraft when descending with deployed parachute is suspended in a certain attitude (wings level, nose lowered). Such attitude ensures a high level of safety to pilots during emergency landing despite the fact that the aircraft structure is likely to be damaged while absorbing the impact at touchdown.

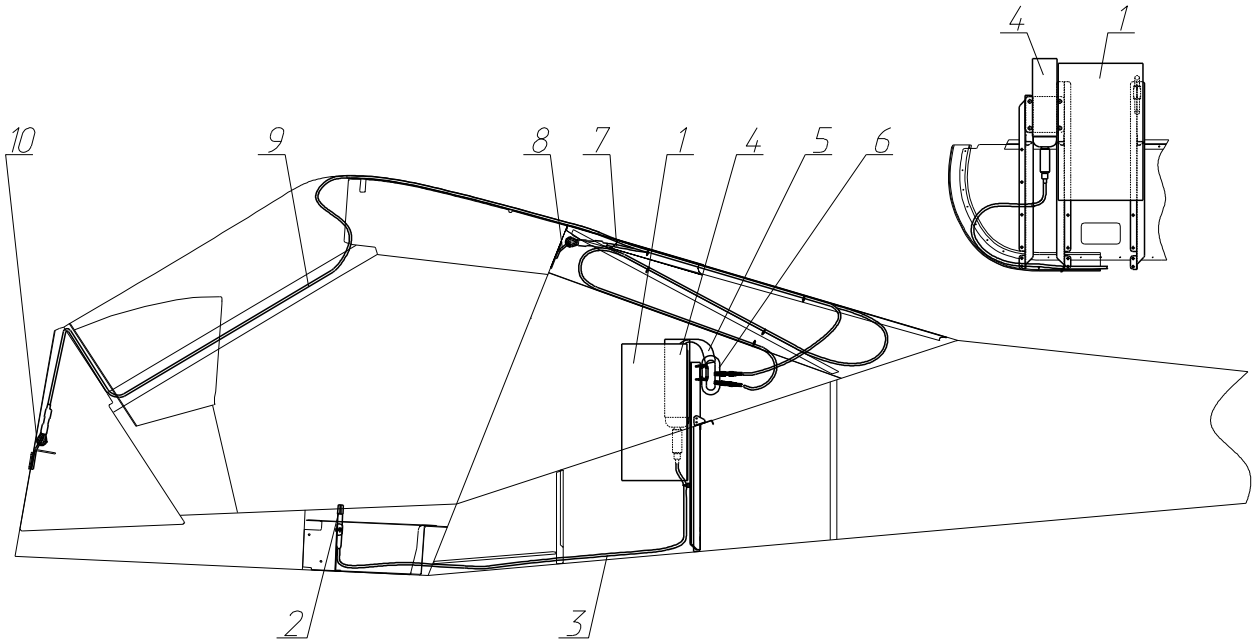

Fig. 28. Recovery system

8 Aircraft Ground Handling and Servicing

8.1 Introduction

This section contains recommendations on aircraft ground handling and servicing important for safe and efficient operation of this aircraft. Besides owners/pilots should keep contact with the aircraft manufacturer in order to obtain in time all service bulletins relevant to their aircraft.

8.2 Towing, parking and tie-down instructions

A-32 may be towed manually or using any suitable towing device (tow powerbar, car, etc.).

Before towing the airplane, make sure that the parking brake is off and the wheels are not blocked by chocks or anything else.

When towing use strong areas of the airplane structure for pulling/pushing, e.g. propeller blades near the spinner, wing struts near their attachment points, nose wheel axle for attaching a towing bar.

Avoid maneuvering the airplane by pushing against its fuselage/wing/empennage skins or cockpit glazing to prevent damaging them.

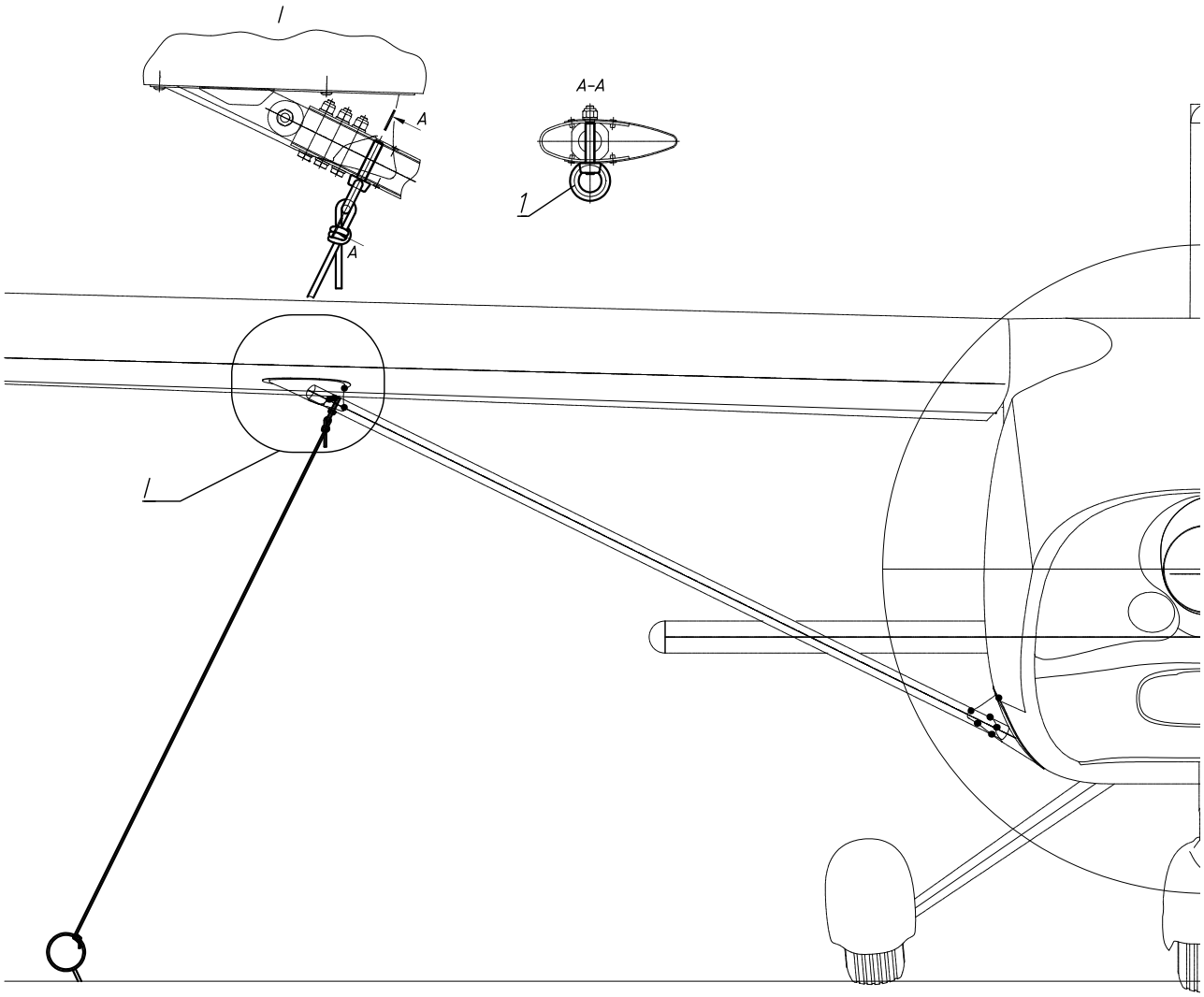

Fig. 29. Tie-down ring

The best way to move the aircraft backward is to raise the nose wheel up by pressing the tail boom down near the fin (prior to that make sure there is no heavy load in the cockpit) and pull the aircraft by holding the tail boom and fin (do not apply load the horizontal tail).

Airplane parking and tie-down shall be done with its nose into the wind (preferably) or at least across the wind but never tail to the wind to avoid damaging the control surfaces.

For tying the airplane down use the wing struts near their attachment points to the wing and propeller shaft. If optional tie-down rings 1 are available (**Fig. 29**) they must be fitted prior to tie-down to the wing struts as shown on **Fig. 29**. Before the flight the tie-down rings may be removed.

Use suitable clamps to fix the ailerons and elevator when the airplane is tied down outside.

When storing the airplane outside it is recommended to protect the cockpit glass with suitable covers.

Never left the cockpit doors open even for a shortest time in a windy weather! Wind may shut the door abruptly and damage it.

8.3 Servicing fuel, oil and coolant

Pilots must check level of fuel, oil and coolant during preflight checks.

Use only those grades of fuel, oil and coolant that are recommended by the Rotax engine operation manual.

Fuel tank inlets in A-32 are not fitted with a fuel filter/strainer therefore fuel must be filled into the tanks using fuel pumps or/and funnels with a fine mesh.

Fuel residue must be drained regularly from the tanks via the drain valve into a clean transparent container for checking.

WARNING: At all times take care not to spill fuel on the cockpit glass – fuel may cause glass dimness and cracks.

When checking oil and coolant level follow the instructions of the Rotax engine operation manual.

If the engine is not operated for long time, oil from the engine will flow to the lowest point of the lubrication system, i.e. oil tank. So before checking the oil level on the cold engine open the oil tank, remove and clean the oil probe and turn the propeller several times until you hear the sound of air bubbles coming into the oil tank which means that the oil from the oil tank was pumped thus into the engine forcing the air from it back into the oil tank. Wait a little while the oil lets out the air bubbles and insert the oil probe to see the actual oil level.

WARNING: Do not turn the propeller against the direction of engine rotation – this may damage the engine.

CAUTION: Do not open the expansion tank of the cooling system while engine is hot! Coolant is under pressure and may burst out and bring injuries or harm.

8.4 Approved fuel and oil

Approved fuel types: antiknock properties — min. RON 90 (min. AKI 91[3]);
European standard — EN 228 super, EN 228 super plus;
Aviation standard — AVGAS 100 LL (ASTM D910).

[3] Anti Knock Index (RON+MON)/2

WARNING: Using fuel grades with ethanol additive content over 5% will deteriorate the condition and shorten the service life of the composite fuel tanks.

Approved oil types: with RON 424 classification.

8.5 Cleaning and care

Keeping the aircraft clean is essential for its efficient and safe operation. Pilots must make sure during the preflight check that the airplane is clean and free of corrosion. Airplane washing should be done using cloth or soft sponge abundantly soaked in water with addition of mild washing agents.

Never use gasoline, solvents or other aggressive liquids for washing the airplane and especially the cockpit glass!

Cockpit glass must be finally washed with plenty of water. It is recommended to let water dry and not to wipe it with a cloth as dust particles stuck in the cloth may scratch the glass.

After airplane washing inspect the parts that must be protected from corrosion (hinges, joints, etc.). Clean them of any remaining water and old grease and lubricate anew.

8.6 Disassembling and assembling the airplane

Aircraft operation and servicing in some cases may require to disassemble (and assemble back) the airplane or remove some of its components. This section describes how to disassemble correctly the airplane by removing its main components: left and right wings, horizontal tail, propeller, engine.

8.6.1 Wing removal

NOTE: Before wing removal empty the wing tanks!

Left and right wings shall be removed in turn (in any order) according to the following sequence (see **Fig. 30** and **Fig. 31**):

1. Disconnect the aileron control shaft.
2. Disconnect the electrical connectors of fuel level sender cable.
3. Disconnect the fuel lines.
4. Disconnect the full and static pressure lines at their joints (4, see **Fig.14** at page **39**).
5. Remove the wing strut brace by disconnecting it from the wing and fuselage while holding the wing.
6. Disconnect the wing at its forward and rear attachment points.

After disconnecting the wings it is recommended to insert all the fasteners back and lock them with safety wire or pins not to loose them. Also secure with safety wire the spherical bearings in the forward and rear wing attachment fittings.

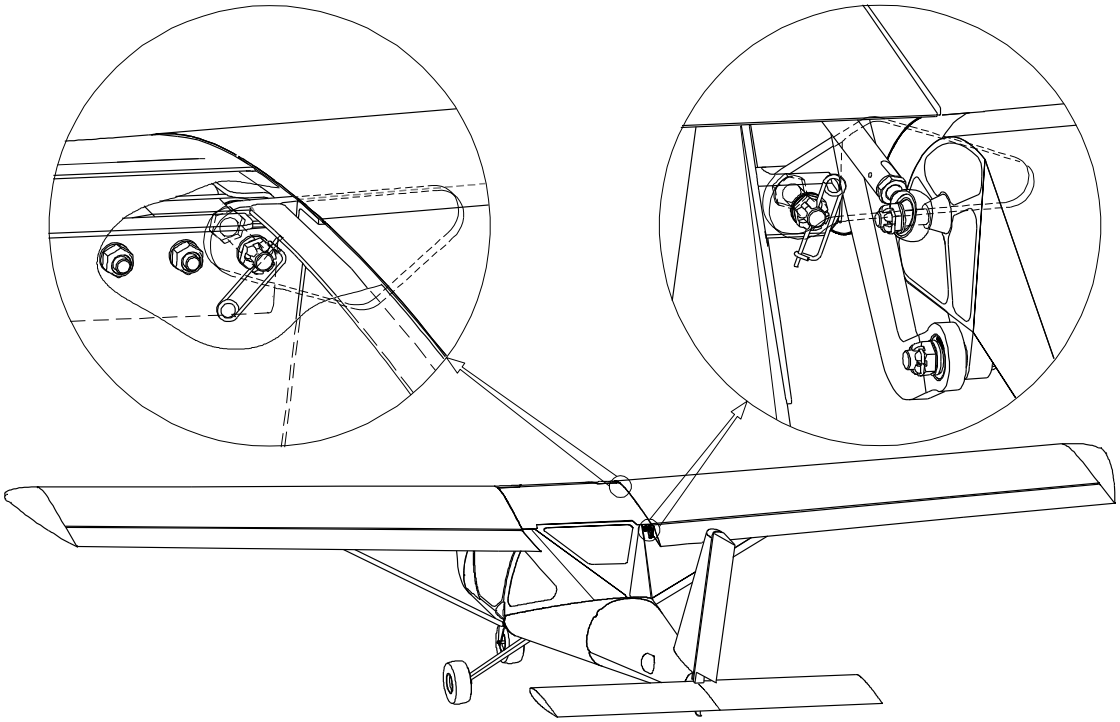

Fig. 30. Wing removal – wing-to-fuselage attachment points

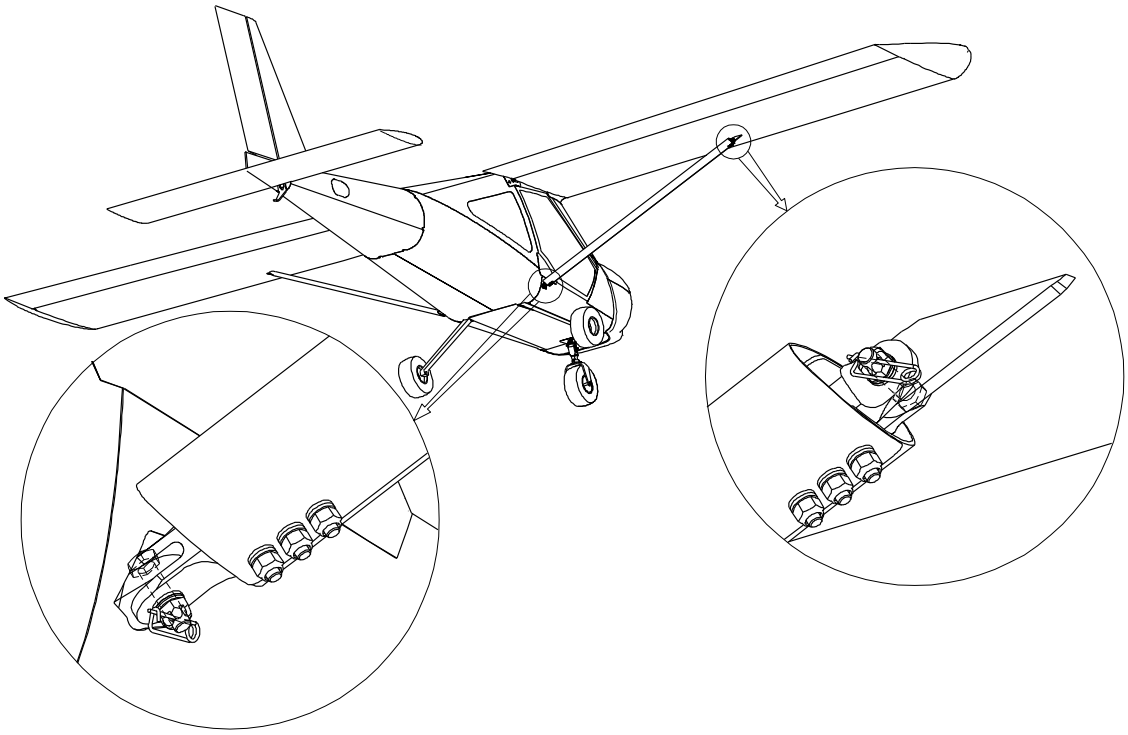

Fig. 31. Wing removal – wing strut attachment points

8.6.2 Removal of the AFHT

Remove the AFHT (see **Fig. 32**) as follows:

1. Remove the tail fairing of fuselage.
2. Disconnect the control rod from the antiservo/trim tab arm.

3. Disconnect the control rod from the AFHT arm.
4. Unfasten the bolts of the AFHT attachment to fuselage and remove the AFHT.

Insert all fasteners back and secure them.

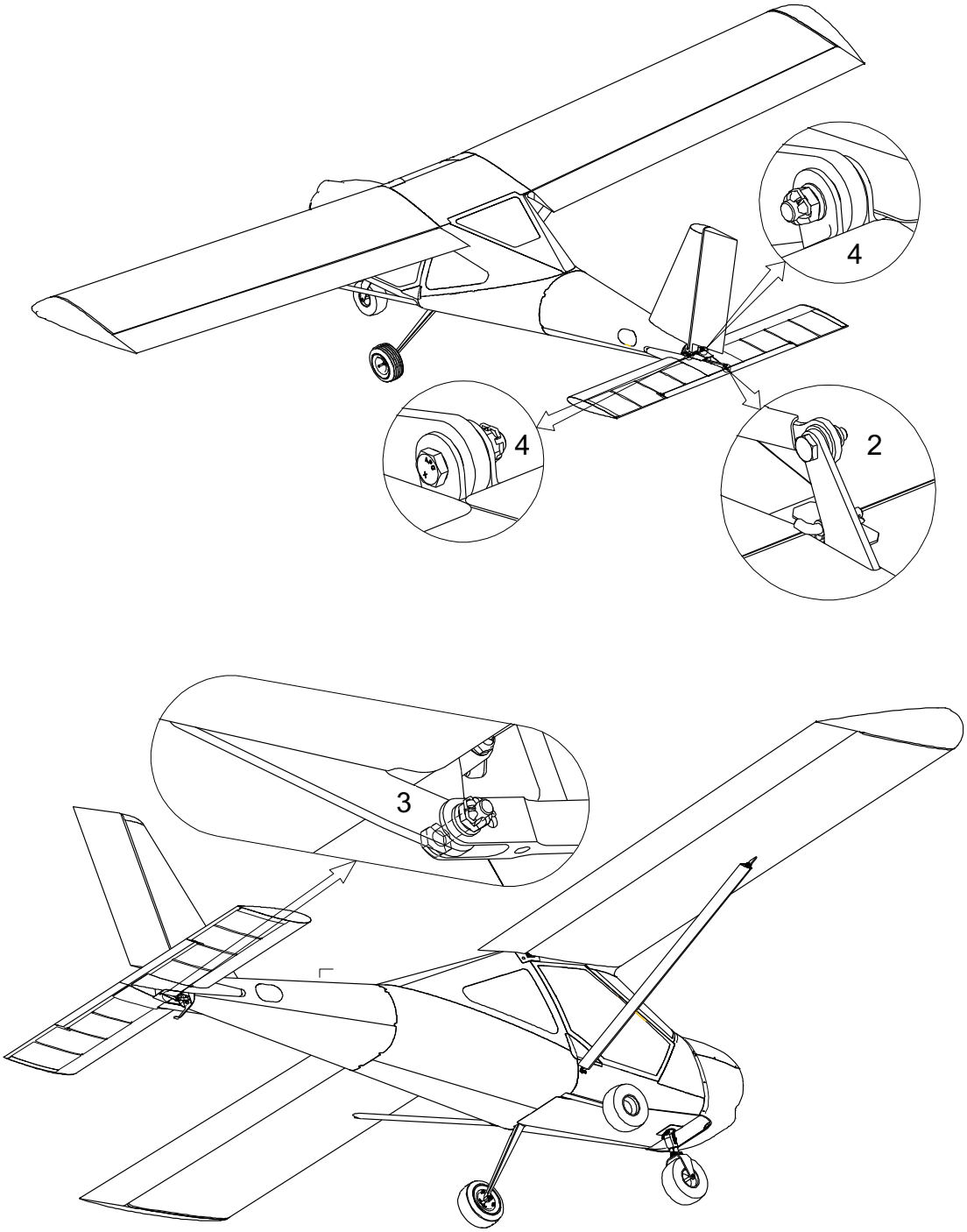

Fig. 32. Removal of the AFHT

8.6.3 Propeller removal

Before dismantling the engine from the aircraft remove the propeller as follows:

- undo and remove the attachment bolts;
- remove the propeller by pulling gently by its hub.

When installing the engine on the aircraft propeller should be installed in reversed order. Disassembled propeller should be carried in a soft package.

8.6.4 Engine removal

NOTE: Before engine removal drain the fuel remaining in the fuel lines!

Engine removal shall be done in the following order:

- remove the engine cowling panels;
- drain the cooling liquid and close all drain openings with plugs;
- remove the water cooler;
- drain the oil and close all drain openings with plugs;
- remove the oil cooler;
- disconnect electrical system cables (connector is installed on the firewall);
- disconnect the throttle and choke control cables;
- disconnect fuel lines;
- drain the fuel from the float chambers of the carburetors;
- pull away the exhaust pipes and remove the exhaust muffler;
- remove the split pins from engine mount attachment studs;
- undo the nuts, take out the bolts and remove the engine.

Engine installation should be performed in reversed order. After installation of the engine install the propeller on it.

8.6.5 Aircraft assembling

Aircraft assembling must be done in exactly reversed order. When installing the horizontal tail it is necessary to lead the trim tab control cable first through its conduit in the stabilizer. All hinges and fittings must be cleaned and greased before assembling the aircraft.

9 Supplements

9.1 General

This section contains information concerning the particular configuration of this airplane (list of installed equipment) along with its actual empty weight and balance data. Any additional manuals for the installed equipment are indicated here.

9.2 Engine manual

A separate engine manual is supplied with every aircraft. On all issues concerning the engine operation and service airplane owner/pilot must consult the engine manual and strictly follow its instructions to ensure safe operation of the aircraft.

9.3 Avionics and special engine instruments

This airplane may be equipped with some optional avionics and special engine instruments. In that case the airplane is supplied with the manuals for that kind of equipment or special instruments. Airplane owner/pilot must follow the instructions of those manuals and respective subsections of this manual to ensure safe and efficient operation of the airplane.

9.4 Recovery system

This airplane may be equipped with a parachute recovery system on customer's request. In that case the airplane is supplied with an operation manual for the recovery system. Airplane owner/pilot must follow the instructions of the recovery system manual and respective subsections of this manual to ensure safe operation of the recovery system installed in the airplane.

9.5 Floats

This aircraft may be equipped with floats for operation on water. In that case the airplane is supplied with a manual for operation and maintenance of the floats. Airplane owner/pilot must follow the instructions of the floats' manual and respective subsections of this manual to ensure safe operation of the airplane and floats.

9.6 List of installed equipment

All equipment installed or replaced in this airplane must be listed in the table below. The equipment affecting weight and balance of the airplane must be also listed in the table of the section **6.2 Installed equipment list**.

No.	Description	Installed by	Date	Signature	Remarks

9.7 Actual empty weight and CG position data

This subsection contains information about the actual empty weight and respective CG position of the airplane. After final assembly, major repair/overhaul, replacement and/or additional installation of any equipment the aircraft must be weighed and respective weight and balance data recorded in the table below:

Empty weight	CG position	Weighed by	Date	Signature	Remarks

9.8 Airplane Flight Training Supplement

Flight training on Aeroprakt-32 airplane foresees 5 hours of flying in accordance with the normal flight procedures, described in Pilot Operating Handbook (POH).

It covers the following:

1. Preflight preparation including determining the takeoff mass and airplane CG position, preflight check and preflight servicing of the airplane.
2. Airfield traffic and flight to the training area.
3. Airfield circuit flight.
4. Balked landing.
5. Low speed flight, recognizing the starting and ongoing stall and stall recovery.
6. High speed flight, recognizing and recovery from steep diving spiral.
7. Short field takeoff and landing with overflying obstacles.
8. Crosswind takeoff and landing.
9. Flights with imitated engine failure.

9.8.1 Preflight preparation

Preflight preparation includes preflight check and determining the takeoff mass and CG position of the airplane. It shall be done in accordance with the sections **4.2** and **6.1** before every flight.

9.8.2 Airfield traffic and flight to the training area

To adapt to the airplane controllability and flight characteristics a flight (its elements are described in the POH) shall be performed that includes the following:

a) Level flight at various airspeeds and engine power settings.
Elevator trim tab shall be used for trimming the airplane in pitch.

b) Climb at various airspeeds and full power of the engine.
Elevator trim tab shall be used for trimming the airplane in pitch.

c) Descending at various airspeeds, flap settings and minimum engine power.
Elevator trim tab shall be used for trimming the airplane in pitch.

d) Turns to the left and to the right at various speeds and bank angles.

Total flight time – 40 minutes. Number of flights – 2. Number of landings – 2.

9.8.3 Airfield circuit flight

Airfield circuit flight shall be performed for familiarization with the main flight elements, as well as takeoff and landing. It consists of the following:

1. Before starting the engine, the door locks shall be checked along with the harness belts, elevator trim tab lever, parking brake and carburetor heating knob; flaps shall be set to 1st position, choke lever shall be moved forward (if the engine is cold), then the master switch and radio shall be turned on. Fuel level and position of the fuel valves (at least one must be open) shall be checked. Radio communication shall be checked, ignition switches set to ON and engine started. After engine begins to run smoothly the choke lever shall be moved back (if it was used). After engine is warmed to the required temperature ignition system check shall be done. Before taxiing the parking brake must be set to OFF.

2. Taxiing is described in the section **1**. Airfield traffic shall be performed in accordance with the airfield traffic diagram. Before lining up full and free movements of the flight controls must be checked.
3. After lining up the engine power setting shall be increased to full and takeoff shall be performed. The takeoff procedure is described in the section **4.7**.
4. Upon reaching the speed of climb of 100 km/h (54 kts) the flaps shall be retracted at safe altitude. No pitch retrimming or loss of altitude occurs after that. The crosswind turn shall be performed during climb after reaching 300 ft altitude.
5. Climb is described in the section **4.9**. Upon climbing to 600 ft the airplane shall be set to level flight. The engine speed shall be reduced to 4000-4200 RPM so that the airspeed of level flight sets in the range of 120-140 km/h. Then the downwind turn shall be performed with the bank angle up to 30°.
6. Between downwind and base turn the elevator trim tab shall be adjusted, if necessary, and engine parameters shall be checked.
7. It is recommended to perform the base turn with a bank angle below 30° in a place where the distance remaining for descend after the final turn is equal to at least 3000 ft.
8. After making the base turn it is necessary to reduce the engine speed to 3000 RPM, reduce the airspeed to 120 km/h (65 kts) and extend the flaps to 1st position. In this case a nose-down pitching moment appears that shall be countered by pulling the yoke back. Then the airspeed must be reduced to 100 km/h (54 kts) and engine speed adjusted so that in the beginning of the final turn the airplane is at approximately 500 ft.
9. It is recommended to make the final turn with a bank angle below 20°. While making the final turn its radius may be corrected by changing the bank angle in order to ensure airplane aligning with the runway after the turn. It is recommended to keep the airspeed in the range of 90-100 km/h (49-54 kts).
10. The required descend angle on final shall be set by adjusting the engine RPM. When engine RPM is increased a slight nose-up pitching moment occurs that shall be countered by pushing the yoke forward. When engine RPM is reduced the effect is opposite. Heading corrections shall be done using rudder pedals. Lateral deviations shall be corrected with S-turns of appropriate bank angle. Recommended airspeed on final 90-110 km/h.
11. At about 15 ft the engine shall be set to idle and airspeed and sink rate reduced by pulling the yoke back gradually so that at the moment of touchdown the airplane reaches the pitch angle required for landing (the top of the engine cowling is slightly higher than the horizon sightline).
12. Direction of the landing roll shall be controlled with rudder pedals. If a series of circuit flights are performed, the touch-and-go technique shall be used. After several seconds of the touchdown the engine speed shall be set to maximum and takeoff shall be performed. When engine power is increased a nose-up pitching moment appears that shall be countered by pushing the yoke a bit forward. In case of a full-stop landing the main wheel brakes may be used when the nose wheel is on the ground.
13. Retract the flaps before vacating the runway.

Total time of circuit flying training – 2 h. Number of flights – 4. Number of landings – 20.

9.8.4 Balked landing

Balked landing (go around) situation occurs due to errors made during approach which can not be corrected or in case if an obstacle is suddenly detected on the runway. The balked landing procedure is described in the section **4.14**.

Total time of balked landing training – 20 minutes. Number of flights – 1. Number of landings – 1.

9.8.5 Low speed flight, recognizing the starting and ongoing stall and stall recovery

The aircraft has no adverse handling features at low speeds and at stall with any of flaps settings. A light vibration of controls in roll may be noticed that warns about approaching to the stalling speed. The stall occurs in form of airplane pitch angle decrease without a noticeable change in bank angle. The airplane recovers from stall immediately if the flight controls are returned to their neutral position. During a low speed flight with wings level deflection of ailerons does not initiate stall. However during a turn at a low speed abrupt aileron deflection may cause stall with noticeable increase in bank angle.

Stall recovery procedure is described in the section **3.2.13**.

Total time of low speed flight training – 20 minutes. Number of flights – 1. Number of landings – 1.

9.8.6 High speed flight, recognizing and recovery from steep diving spiral

The aircraft has no peculiar handling features at high speeds. The control forces increase with airspeed growing and that impedes the abrupt control inputs and exceeding the limit loads due to that. During high speed flight the engine parameters must be monitored and exceeding its operational limits must be prevented.

To recover from a steep spiral the engine RPM must be reduced first and then the airplane must be brought to level flight by deflecting gently the ailerons and elevator.

Total time of high speed flight training – 20 minutes. Number of flights – 1. Number of landings – 1.

9.8.7 Short field takeoff and landing with overflying obstacles

Short field takeoff and landing procedures are described in the sections **4.8** and **4.13**. To fly over the obstacles (if any) during the climb and approach it is recommended to set the flaps to 2nd position and fly at the best climb angle speed V_X = 100 km/h (54 kts).

Total time of short field takeoff and landing training – 20 minutes. Number of flights – 1. Number of landings – 4.

9.8.8 Crosswind takeoff and landing

It is recommended to use 1st flap setting during crosswind takeoff or landing.

In case of crosswind takeoff it is necessary to rotate the yoke (move the stick) by 1/3 of its full travel against the wind direction to counter the downwind drift and control the heading using the rudder pedals. Then the takeoff will occur with some bank angle. After the takeoff the wings shall be set level, the downwind drift shall be countered with an appropriate change of heading and climb shall be continued.

In case of crosswind landing it is recommended to keep the airplane aligned with the runway using rudder pedals while countering the downwind drift with a bank angle against the wind direction. The bank angle value shall be appropriate to the crosswind strength. The bank shall be maintained until touchdown which will occur with one of the main wheels touching

the ground before the other. During the landing roll the nose wheel shall be kept lifted as long as possible and the heading shall be maintained using the rudder pedals. Immediately before the nose wheel is finally touching the ground the rudder pedals shall be set neutral in order to prevent the side load on the nose leg.

Total time of crosswind takeoff and landing training – 30 minutes. Number of flights – 1. Number of landings – 6.

9.8.9 Flights with imitated engine failure

The emergency procedures in case of engine failure are described in the sections **3.2.2** - **3.2.5**. When imitating the engine failure it is recommended to reduce the engine RPM to idle. While doing that it should be kept in mind that sink rate with the engine stopped is by 100 fpm higher than that with the engine at idle because of the remaining propeller thrust. Special attention shall be paid to maintaining the airspeed. The imitated engine failures shall be done at every leg of the airfield circuit.

Total time of imitated engine failure training – 30 minutes. Number of flights – 1. Number of landings – 4.

9.9 Airplane Owner Feedback to Manufacturer

To ensure continued operational safety of the airplane the airplane owner(s) must keep in contact with the airplane manufacturer and report all issues associated with the operational safety of the airplane to the airplane manufacturer. The Feedback Form for operational safety reporting is contained in the Aircraft Maintenance Manual.

Besides airplane owner(s) must inform the airplane manufacturer about the changes in their address or airplane ownership rights. No particular form for that is prescribed. Information about the change of address or airplane ownership rights may be delivered to the airplane manufacturer in writing by fax or e-mail. This information must be accurate and sufficiently detailed for keeping contact between the airplane manufacturer and owner.